XPRESS EXECUTE XQ10 SET-UP SHEET

Driver	Felix Law	Track Surface	Outdoor	Asphalt	Track Temperture		
Date	7/4/2020	Track Traction	Medium	Result		Air Temperature	36F
Track	Coral Spring RC	Country	USA	Best Lap	12.5	Humidity	
Remark							

Front

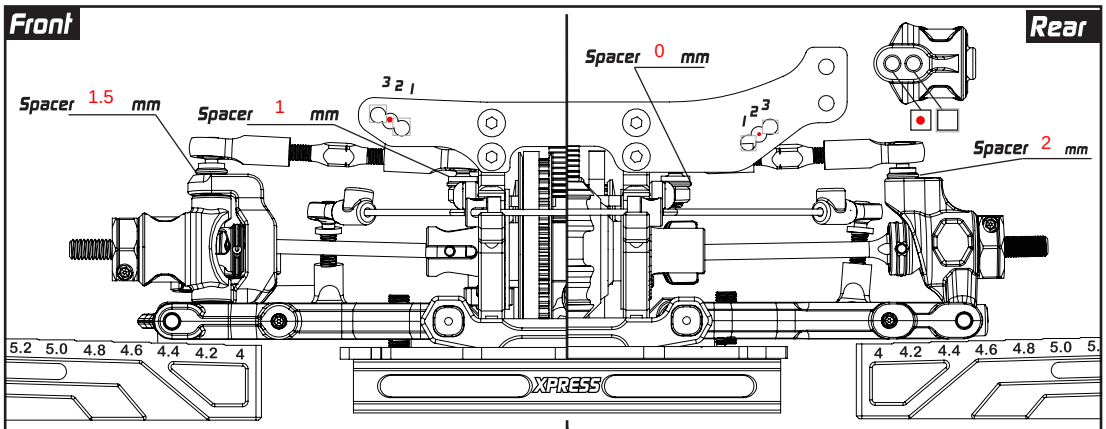

Rear

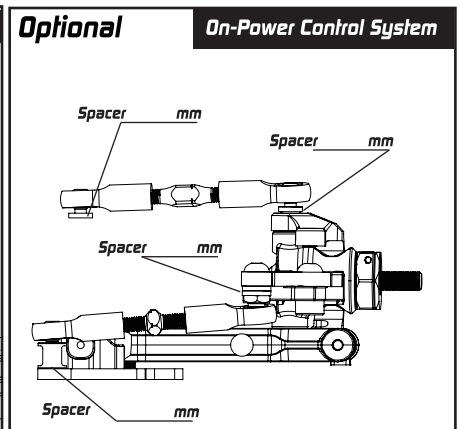

	Front	Rear
Camber Link		Camber Link
C-Hub	☐ M ☐ H	
Steering Block	☐ M ☐ H	
Suspension Arm	☐ M ☐ H	
Hex Offset	4.25 mm	4.5 mm
Camber	2 °	2 °
Ride Height	5.0 mm	5.4 mm
DownStop	5.2 mm	4 mm
Sway Bar	1.3 mm	1.3 mm
Rear Hub		☐ M ☐ H
Suspension Arm		☐ M ☐ H

Optional

On-Power Control System

Hex Offset	mm
Camber	°
Ride Height	mm
DownStop	mm
Sway Bar	1.2 mm
Steering Block	☐ M ☐ H
Suspension Arm	☐ M ☐ H

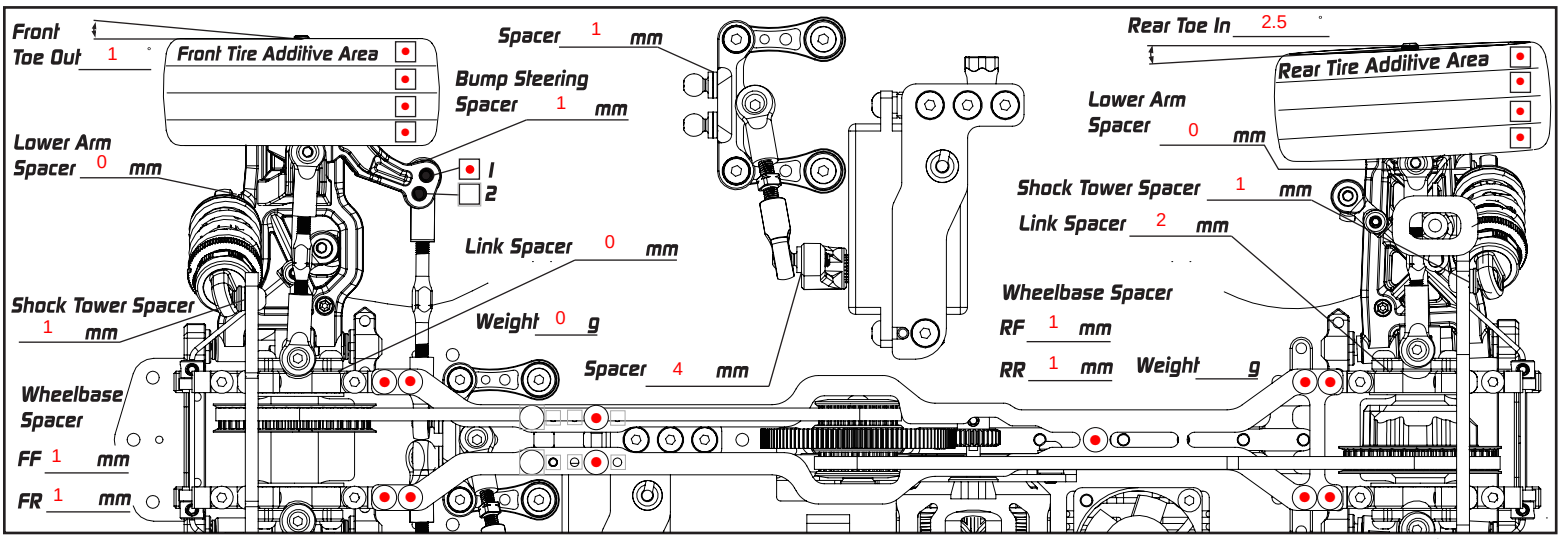

Suspension Mount Setup

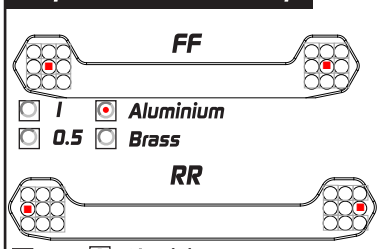

	FF	RR
1	☐ Aluminium	☐ Aluminium
0.5	☐ Brass	☐ Brass

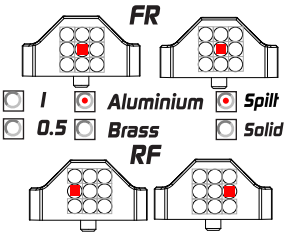

	FR	RF
1	☐ Aluminium ☐ Spilt	☐ Aluminium ☐ Spilt
0.5	☐ Brass ☐ Solid	☐ Brass ☐ Solid

Flex Control

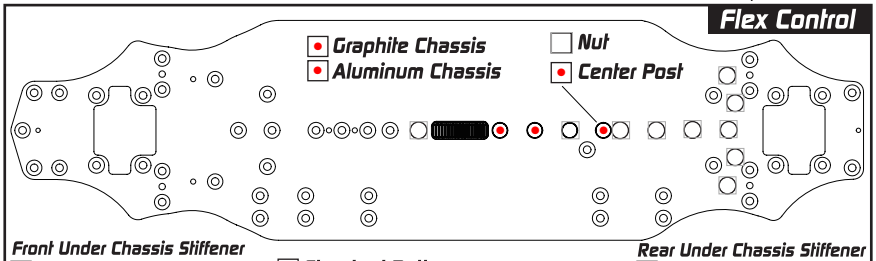

☐ Graphite Chassis
☐ Aluminum Chassis
☐ Nut
☐ Center Post

Front Under Chassis Stiffener
- ☐ None
- ☐ Graphite
- ☐ Brass

☐ Standard Battery
☐ Short Battery (Forward Position)
☐ Short Battery (Backward Position)

Rear Under Chassis Stiffener
- ☐ None
- ☐ Graphite
- ☐ Brass

Damper Setup

	Front	Rear
Spring	Pink Xpress	Pink Xpress
Oil	450 kit	450 kit
Rebound	normal	Normal
Piston	4	4
Length	9	9.5
Foam Insert	☐	☐
Hole In Cap	☐	☐

Transmission Setup

	Front	Rear
	Spool	Gear Diff
Oil		5000
Weight	g	1.1 g
Position	High	Low

Others

Servo	SSL LH	Tires	Solaris
Esc	Maclan	Additive	Yellow V3
Motor	Maclan	Body	DBX
Spur	64 P/ 112 T	Rear Wing	DBX
Pinon	64 P/ 29 T	FDR	7.337