XPRESS EXECUTE XQ10 SET-UP SHEET

Driver	Felix Law	Track Surface	Indoor	Carpet	Track Temperture		
Date	9/6/2020	Track Traction	Low	Result		Air Temperature	36F
Track	Beachline RC	Country	USA	Best Lap	9.4	Humidity	
Remark	Jaco, No glue and full front sauce						

Front / Rear

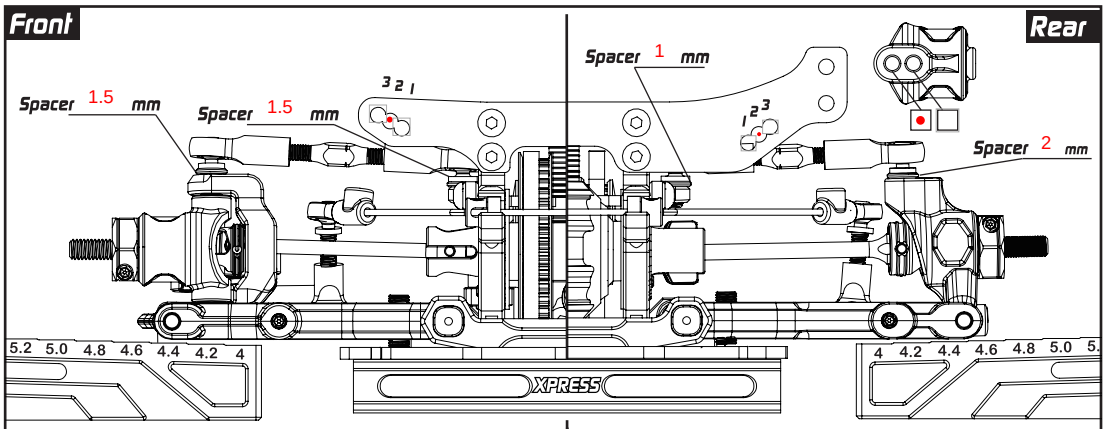

	Front	Rear
Camber Link	C-Hub ☐ M ☒ H	Camber Link
Steering Block	☐ M ☒ H	Rear Hub ☐ M ☒ H
Suspension Arm	☐ M ☒ H	Suspension Arm ☐ M ☒ H
Hex Offset	5 mm	5 mm
Camber	2 °	2 °
Ride Height	5.0 mm	5.2 mm
DownStop	5.4 mm	4.4 mm
Sway Bar	1.3 mm	1.3 mm

Optional — On-Power Control System

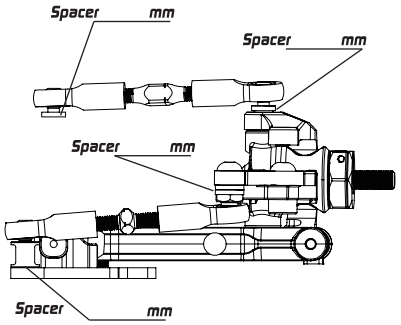

Hex Offset	mm
Camber	°
Ride Height	mm
DownStop	mm
Sway Bar	1.2 mm
Steering Block	☐ M ☐ H
Suspension Arm	☐ M ☐ H

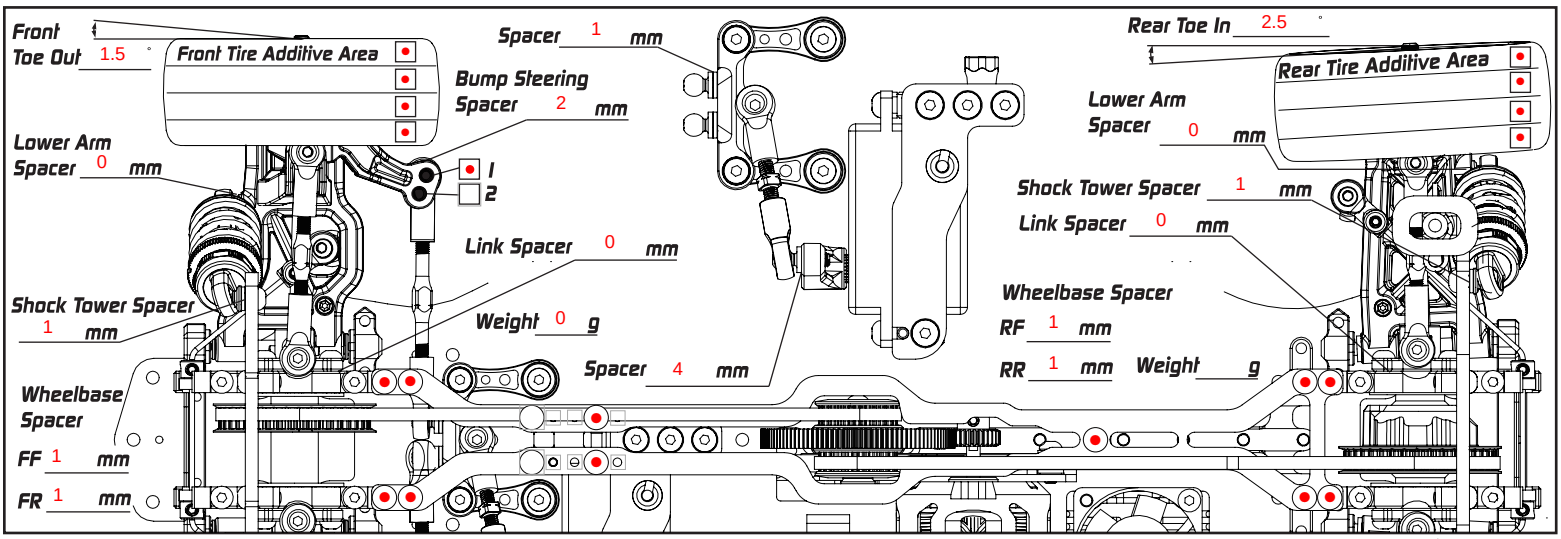

Suspension Mount Setup

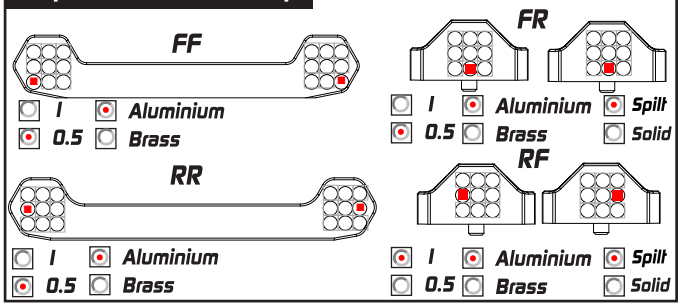

FF	☐ 1 ☒ Aluminium ☒ 0.5 ☐ Brass	FR	☐ 1 ☒ Aluminium ☒ 0.5 ☐ Brass ☒ Spilt ☐ Solid
RR	☐ 1 ☒ Aluminium ☒ 0.5 ☐ Brass	RF	☐ 1 ☒ Aluminium ☒ 0.5 ☐ Brass ☒ Spilt ☐ Solid

Flex Control

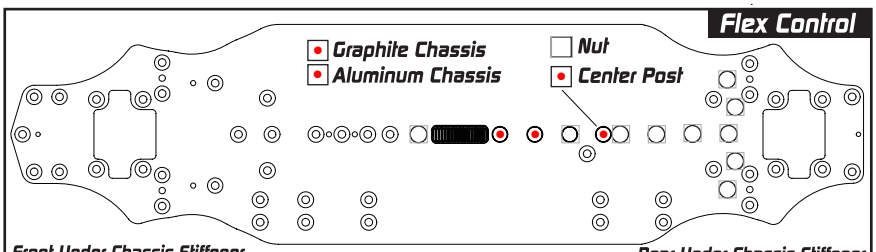

☒ Graphite Chassis
☒ Aluminum Chassis
☐ Nut
☒ Center Post

Front Under Chassis Stiffener		Rear Under Chassis Stiffener
☒ None	☒ Standard Battery	☒ None
☐ Graphite	☐ Short Battery (Forward Position)	☐ Graphite
☐ Brass	☐ Short Battery (Backward Position)	☐ Brass

Damper Setup

	Front	Rear
Spring	Yokomo 2.4 2.9	yokomo 2.45 2.75
Oil	450 kit	450 kit
Rebound	normal	Normal
Piston	4	4
Length	8.5	8.5
Foam Insert	☐	Foam Insert ☐
Hole In Cap	☐	Hole In Cap ☐

Transmission Setup

Front		Rear	
	Spool	Gear Diff	
Oil		Oil	5000
Weight	g	Weight	1.1 g
Position	High	Position	High

Others

Servo	SSL LH	Tires	Jaco
Esc	Maclan	Additive	SXT 3.0
Motor	Proto	Body	DBX
Spur	64 P/ 96 T	Rear Wing	DBX
Pinon	64 P/ 39 T	FDR	4.676