XPRESS EXECUTE XQ10 SET-UP SHEET

Driver	Felix Law	Track Surface	Indoor Carpet			Track Temperture	
Date	8/9/2020	Track Traction	Low	Result		Air Temperature	36F
Track	Beachline RC	Country	USA	Best Lap	9.6	Humidity	
Remark	0.5 shim under all suspension block						

Front / Rear

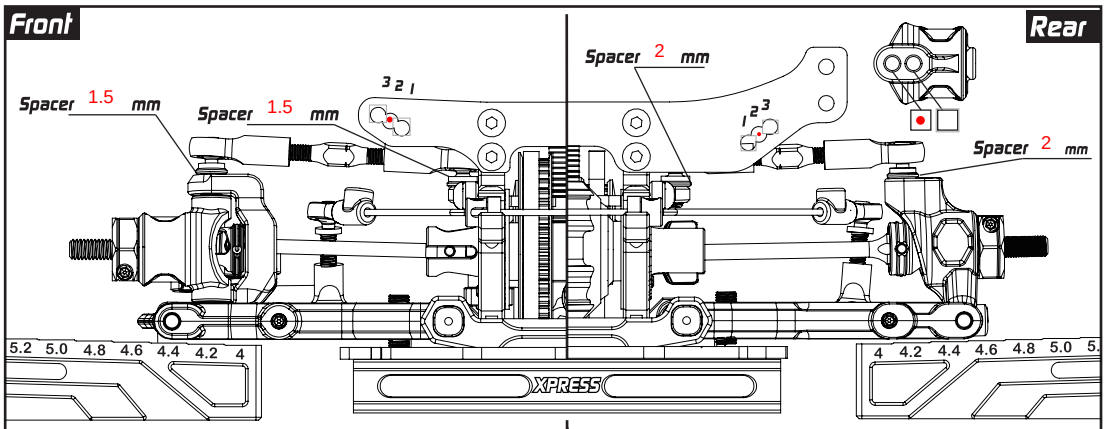

	Front	Rear
Hex Offset	5 mm	5 mm
Camber	2 °	2 °
Ride Height	4.8 mm	5.2 mm
DownStop	5.4 mm	4.4 mm
Sway Bar	1.3 mm	1.3 mm

Camber Link: ☐ M ☒ H
C-Hub: ☐ M ☒ H
Steering Block: ☐ M ☒ H
Suspension Arm: ☐ M ☒ H
Rear Hub: ☐ M ☒ H
Suspension Arm: ☐ M ☒ H
Camber Link: ☒ / ☐

Optional — On-Power Control System

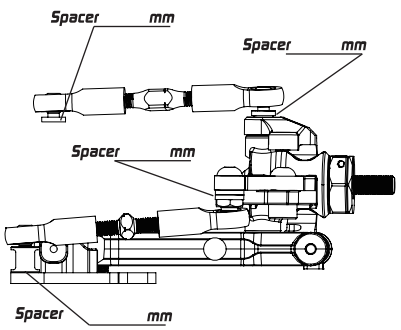

Hex Offset	mm
Camber	°
Ride Height	mm
DownStop	mm
Sway Bar	1.2 mm

Steering Block: ☐ M ☐ H
Suspension Arm: ☐ M ☐ H

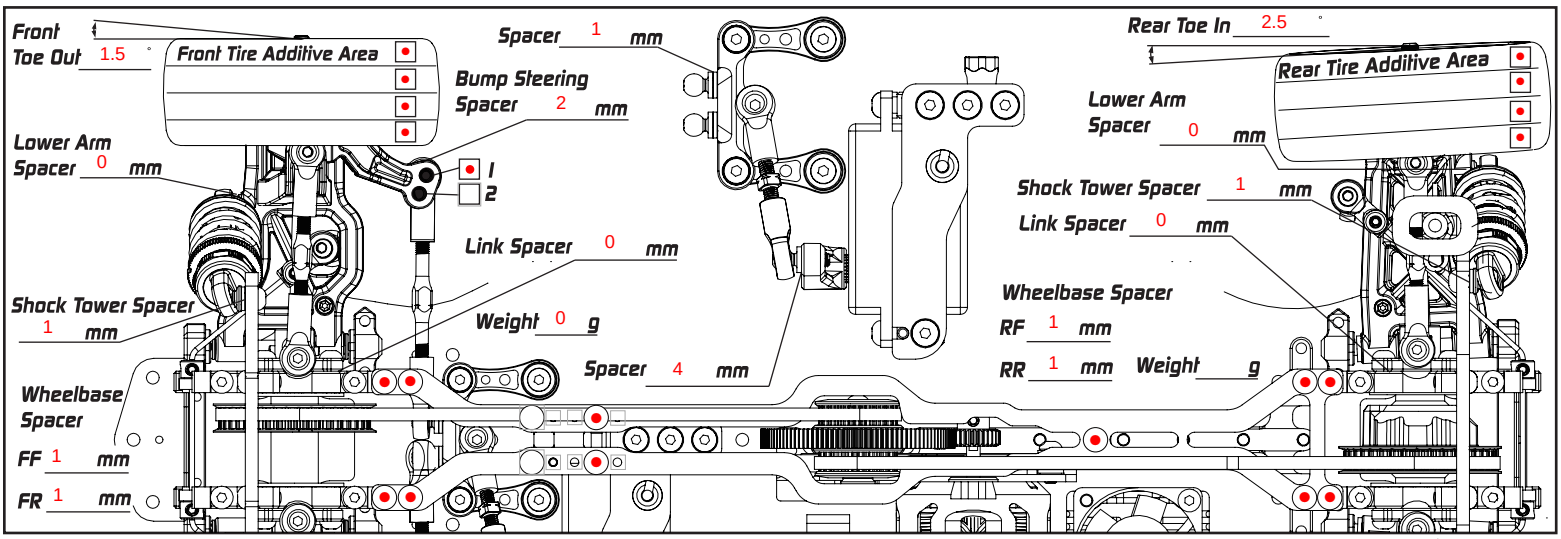

Suspension Mount Setup

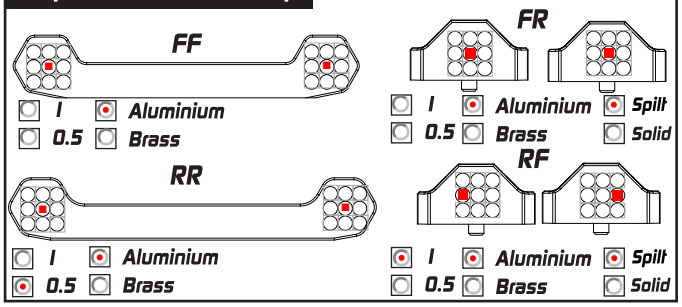

	FF	FR	RR	RF
1	☐	☒	☐	☒
0.5	☐	☐	☒	☐
Aluminium	☒	☒	☒	☒
Brass	☐	☐	☐	☐
Spilt		☐		☐
Solid		☐		☐

Flex Control

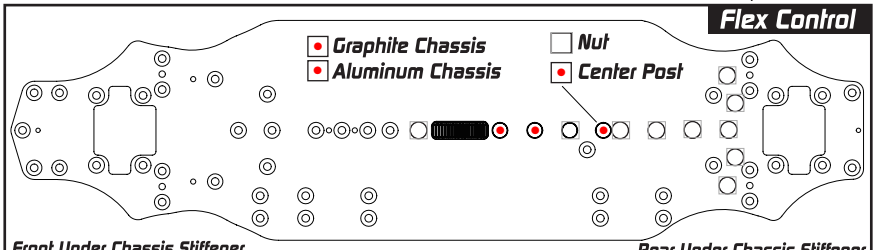

☒ Graphite Chassis
☒ Aluminum Chassis
☐ Nut
☒ Center Post

Front Under Chassis Stiffener
☒ None
☐ Graphite
☐ Brass

☒ Standard Battery
☐ Short Battery (Forward Position)
☒ Short Battery (Backward Position)

Rear Under Chassis Stiffener
☒ None
☐ Graphite
☐ Brass

Damper Setup

	Front	Rear
Spring	Yokomo 2.4 2.9	yokomo 2.45 2.75
Oil	450 kit	450 kit
Rebound	normal	Normal
Piston	4	4
Length	8.5	8.5
Foam Insert	☐	☐
Hole In Cap	☐	☐

Transmission Setup

	Front	Rear
	Spool	Gear Diff
Oil		5000
Weight	g	1.1 g
Position	High	High

Others

Servo	SSL LH	Tires	Jaco
Esc	Maclan	Additive	SXT 3.0
Motor	Maclan	Body	DBX
Spur	64 P/ 112 T	Rear Wing	DBX
Pinon	64 P/ 29 T	FDR	7.337