XPRESS EXECUTE XQ10 SET-UP SHEET

Driver	Fabio Ramos	Track Surface	Outdoor	Asphalt		Track Temperture	
Date		Track Traction	Medium	Result		Air Temperature	
Track	C.R. Ben	Country	Portugal	Best Lap		Humidity	Remark

Front

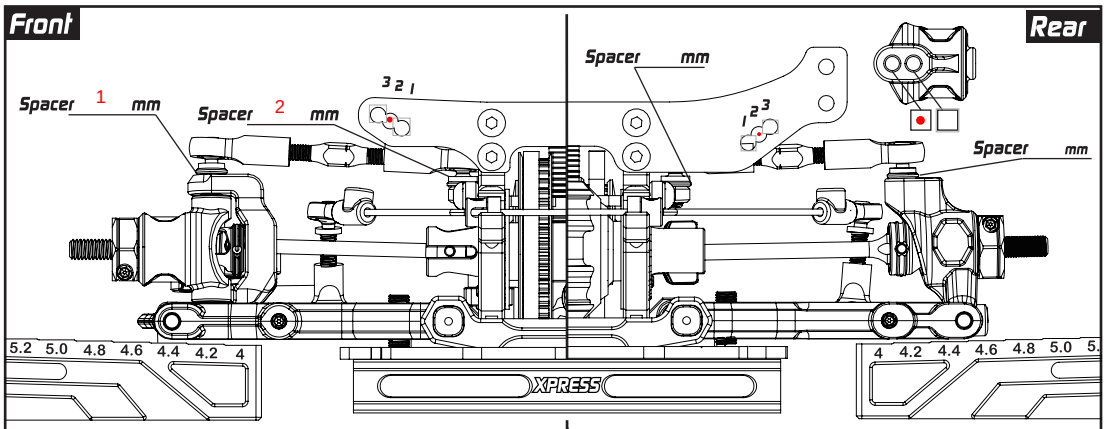

Rear

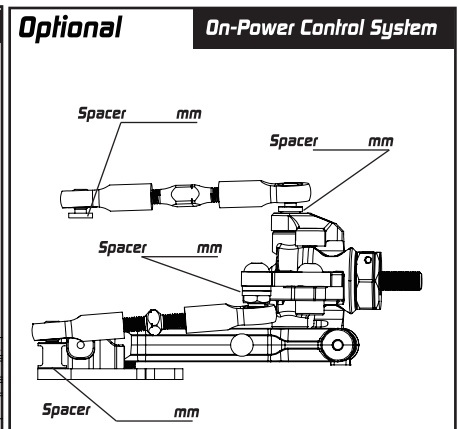

	Front	Rear
Camber Link		Camber Link
C-Hub	● M ○ H	
Steering Block	○ M ● H	
Suspension Arm	● M ○ H	
Hex Offset	5 mm	5 mm
Camber	2 °	2 °
Ride Height	5.2 mm	5.4 mm
DownStop	5.6 mm	4.6 mm
Sway Bar	1.3 mm	1.3 mm
Rear Hub		● M ○ H
Suspension Arm		● M ○ H

Optional — On-Power Control System

Hex Offset	mm
Camber	°
Ride Height	mm
DownStop	mm
Sway Bar	1.2 mm
Steering Block	○ M ○ H
Suspension Arm	○ M ○ H

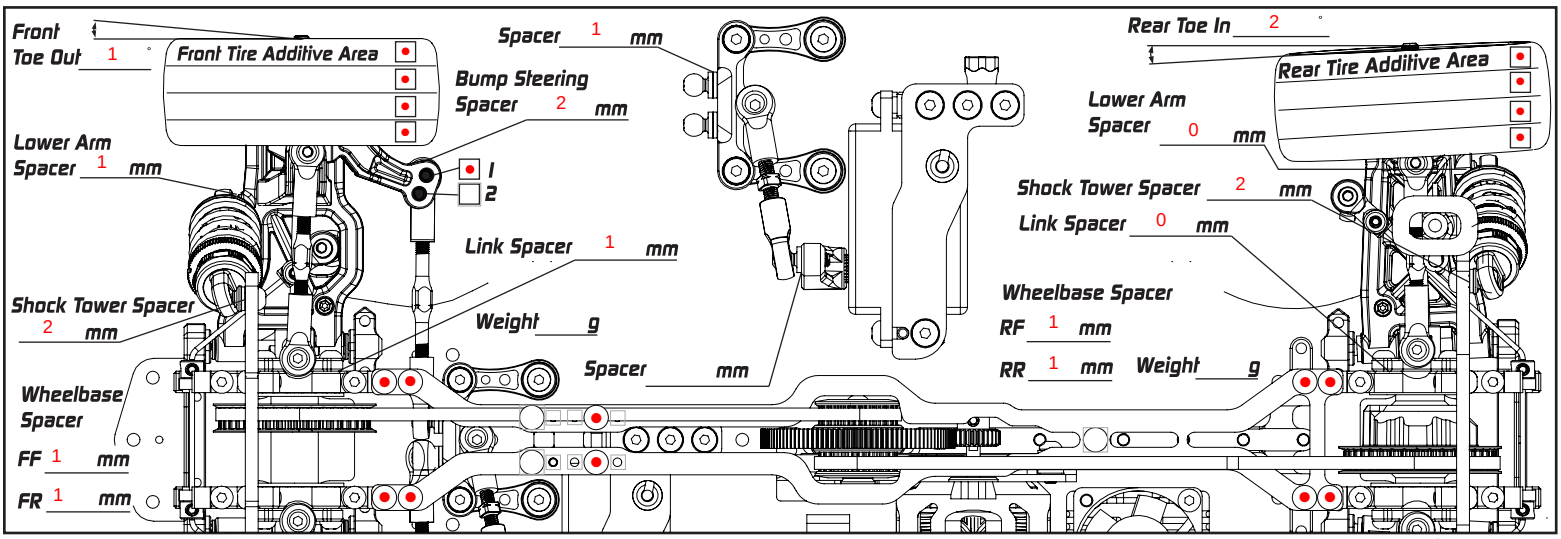

Suspension Mount Setup

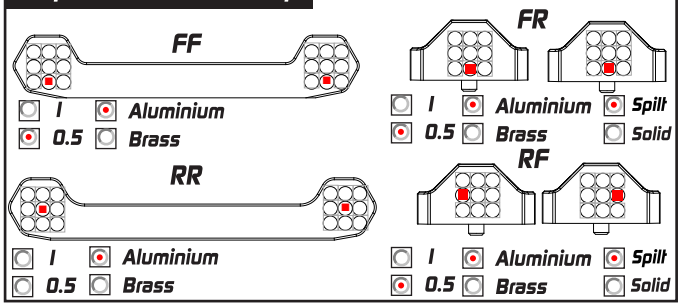

	FF	FR	RR	RF
1	● Aluminium	○ Aluminium	○ Aluminium	○ Aluminium
0.5	○ Brass	● Brass	○ Brass	● Brass
		○ Spilt		○ Spilt
		○ Solid		○ Solid

Flex Control

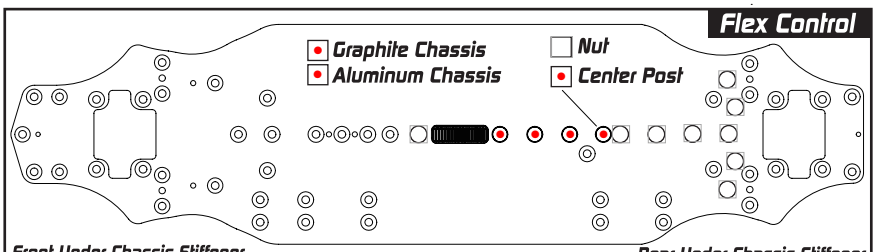

● Graphite Chassis
● Aluminum Chassis
○ Nut
● Center Post

Front Under Chassis Stiffener		Rear Under Chassis Stiffener
○ None	● Standard Battery	○ None
○ Graphite	○ Short Battery (Forward Position)	○ Graphite
○ Brass	○ Short Battery (Backward Position)	○ Brass

Damper Setup

	Front	Rear
Spring		
Oil	450	450
Rebound	1.5mm	1.5mm
Piston	4	4
Length	9.5	9.5
Foam Insert	○	○
Hole In Cap	●	●

Transmission Setup

Front		Rear	
	Spool	Gear Diff	
Oil		Oil	5000
Weight	g	Weight	1.3 g
Position	High	Position	High

Others

Servo		Tires	
Esc		Additive	
Motor		Body	
Spur	P/ T	Rear Wing	
Pinon	P/ T	FDR	NaN