XPRESS EXECUTE XQ10 SET-UP SHEET

Driver	Chau man	Track Surface	Outdoor Asphalt	Track Temperture			
Date	2021.07.04	Track Traction	Medium	Result		Air Temperature	
Track	TRC	Country		Best Lap		Humidity	
Remark	X2-00107 X2-00108 XP-10813						

Front

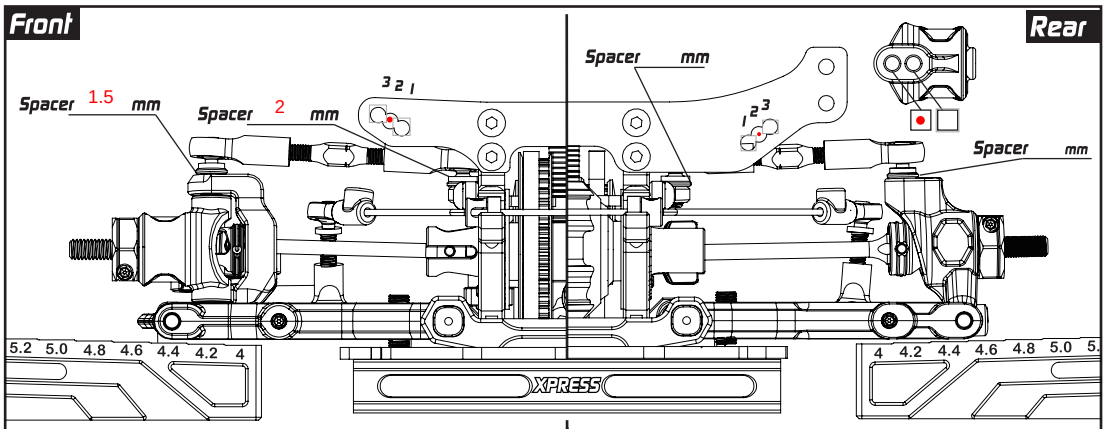

Rear

Camber Link	C-Hub ☐ M ☒ H	Hex Offset	5 mm
	Steering Block ☐ M ☒ H	Camber	2 °
	Suspension Arm ☐ M ☒ H	Ride Height	5 mm
		DownStop	5.6 mm
		Sway Bar	1.3 mm

mm		Camber Link
°		
mm	Rear Hub ☒ M ☐ H	
mm	Suspension Arm ☒ M ☐ H	
1.3 mm		

Optional — On-Power Control System

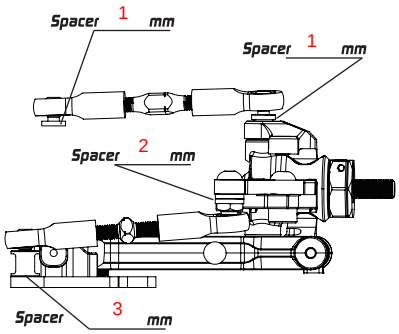

Hex Offset	5 mm		
Camber	2 °		
Ride Height	5.3 mm	Steering Block	☐ M ☒ H
DownStop	4.6 mm	Suspension Arm	☐ M ☒ H
Sway Bar	1.3 mm		

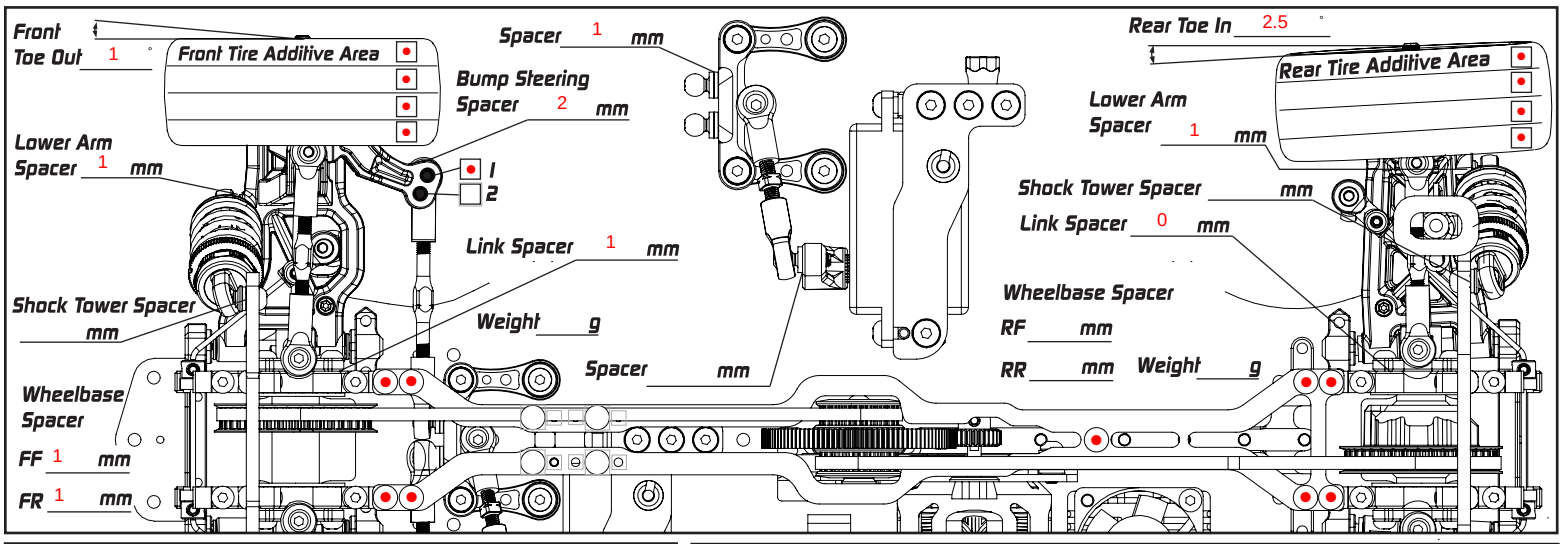

Suspension Mount Setup

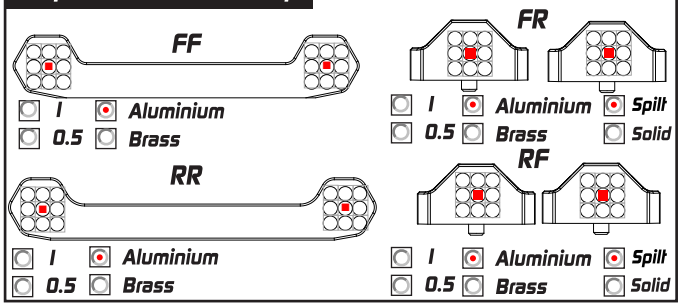

Flex Control

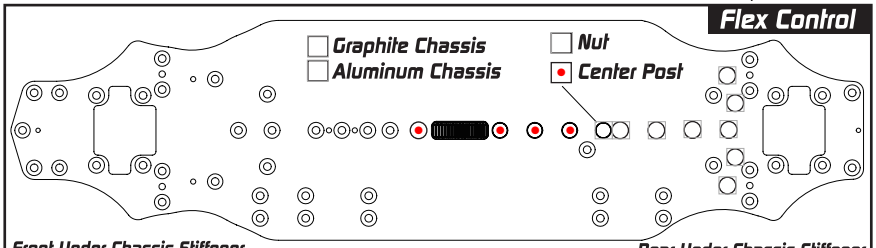

☐ Graphite Chassis ☐ Aluminum Chassis

☐ Nut ☒ Center Post

Front Under Chassis Stiffener
- ☐ None
- ☐ Graphite
- ☐ Brass

- ☒ Standard Battery
- ☐ Short Battery (Forward Position)
- ☐ Short Battery (Backward Position)

Rear Under Chassis Stiffener
- ☐ None
- ☐ Graphite
- ☐ Brass

Damper Setup

	Front	Rear
Spring	XP-10170	XP-10168
Oil	350	350
Rebound	0	0
Piston	4	4
Length	10	10.5
Foam Insert	☐	☐
Hole In Cap	☐	☐

Transmission Setup

Front	Rear
Spool	Gear Diff
Oil	Oil 5000
Weight g	Weight 1.1 g
Position High	Position High

Others

Servo	Power HD	Tires	Team power
Esc	ORCA	Additive	
Motor	ORCA 5.5T	Body	Xtreme BRUTALE
Spur	64 P/ 110 T	Rear Wing	
Pinon	64 P/ 30 T	FDR	6.966