# XPRESS EXECUTE XQ10 SET-UP SHEET

| | | | | | | | |
|---|---|---|---|---|---|---|---|
| Driver | C.Y.Leung | Track Surface | Outdoor | Asphalt | Track Temperture | 50˚C | |
| Date | 16-05-2021 | Track Traction | Medium | Result | A2 | Air Temperature | 31˚C |
| Track | TRC | Country | Hong Kong | Best Lap | 15.3 | Humidity | -- |
| Remark | 0.5 under susp. mount | | | | | | |

## Front

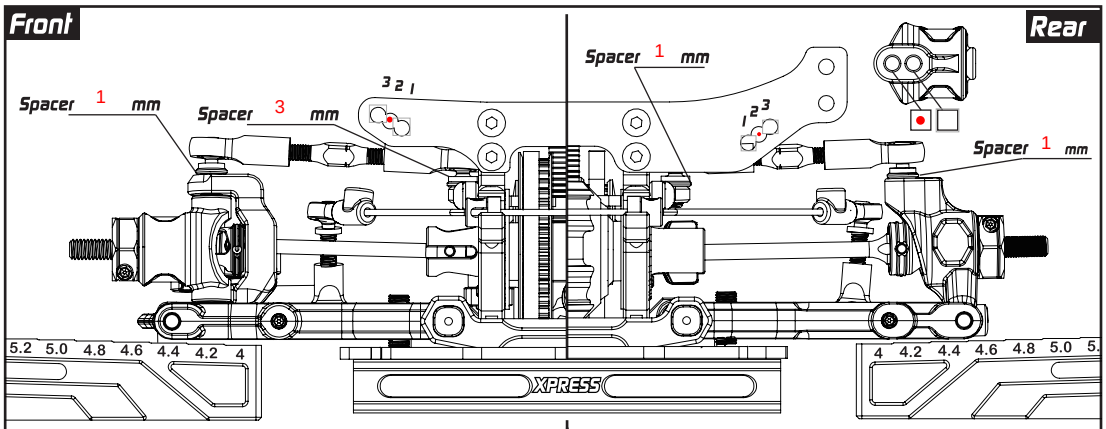


## Rear

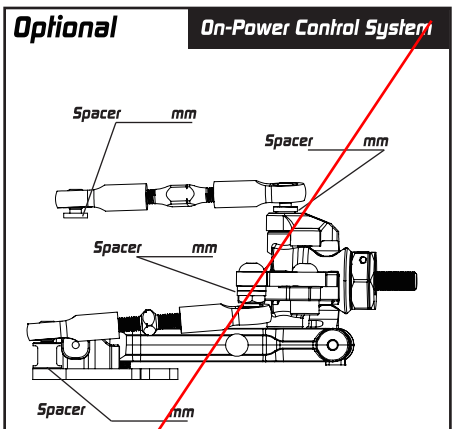


| | Front | Rear |
|---|---|---|
| Camber Link | | Camber Link |
| C-Hub | ☐ M ☒ H | |
| Steering Block | ☐ M ☒ H | |
| Suspension Arm | ☐ M ☒ H | |
| Hex Offset | 5 mm | 5 mm |
| Camber | 3 ° | 2.5 ° |
| Ride Height | 5.2 mm | 5.4 mm |
| DownStop | 5.8 mm | 5.0 mm |
| Sway Bar | 1.3 mm | 1.3 mm |
| Rear Hub | | ☐ M ☒ H |
| Suspension Arm | | ☐ M ☒ H |

## Optional — On-Power Control System




| | |
|---|---|
| Hex Offset | mm |
| Camber | ° |
| Ride Height | mm |
| DownStop | mm |
| Sway Bar | 1.2 mm |
| Steering Block | ☐ M ☐ H |
| Suspension Arm | ☐ M ☐ H |

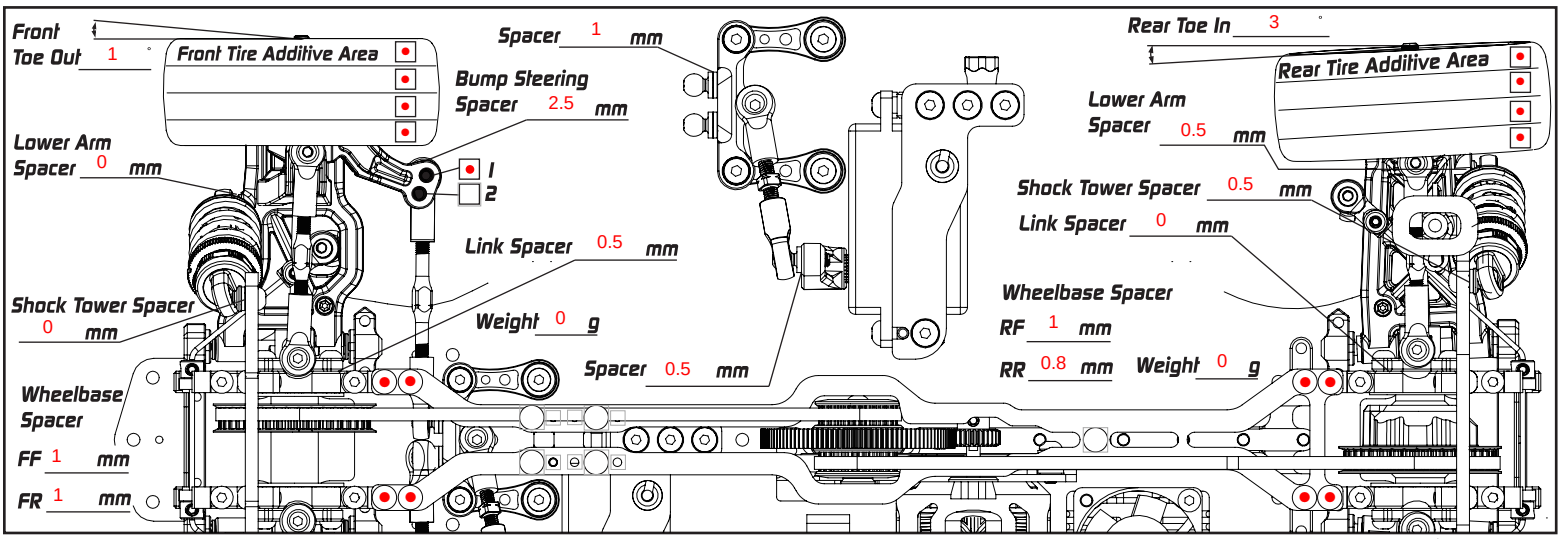


## Suspension Mount Setup

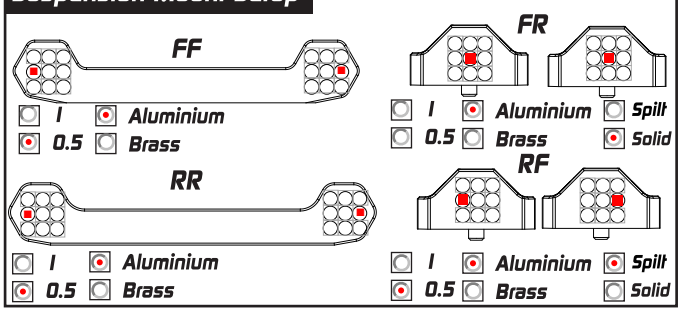


## Flex Control

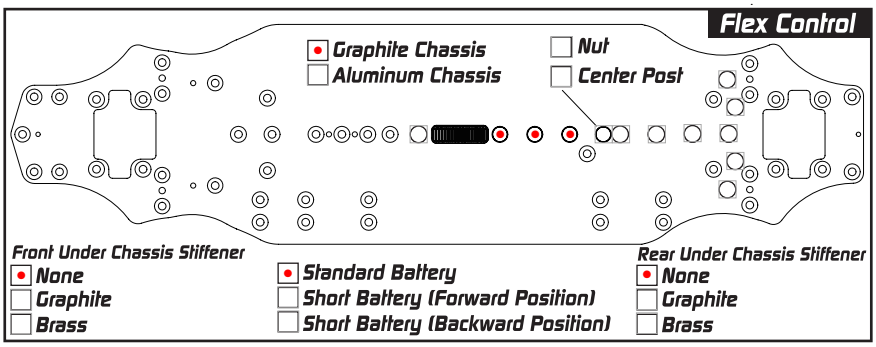


## Damper Setup

| | Front | Rear |
|---|---|---|
| Spring | SMJ 2.5-2.8 | Axon 2.8 (Brown) |
| Oil | Hudy - 550 | Hudy - 550 |
| Rebound | 4mm | 0mm |
| Piston | 4 | 4 |
| Length | 10mm | 10mm |
| Foam Insert | ☐ | ☐ |
| Hole In Cap | ☐ | ☐ |

## Transmission Setup

| | Front | Rear |
|---|---|---|
| | Spool | |
| Gear Diff | | |
| Oil | | Infinity - 8K |
| Weight | g | 1.3 g |
| Position | High | High |

## Others

| | | | |
|---|---|---|---|
| Servo | Power HD S15 | Tires | GQ 36 (Control) |
| Esc | Orca oe1 | Additive | mighty V3 Yellow |
| Motor | Rocket 13.5 (control) | Body | Xtreme Twister |
| Spur | 64 P/ 102 T | Rear Wing | Std (0.5mm) |
| Pinon | 64 P/ 43 T | FDR | 4.506 |