XPRESS EXECUTE XQ10 SET-UP SHEET

Driver	Felix Law	Track Surface	Outdoor Asphalt			Track Temperture	
Date	02/20/2021	Track Traction	Low	Result		Air Temperature	
Track	SS Raceway	Country	USA	Best Lap	10.9	Humidity	
Remark	X-Square upper Bulkhead used, 0.75 RF block						

Front / Rear

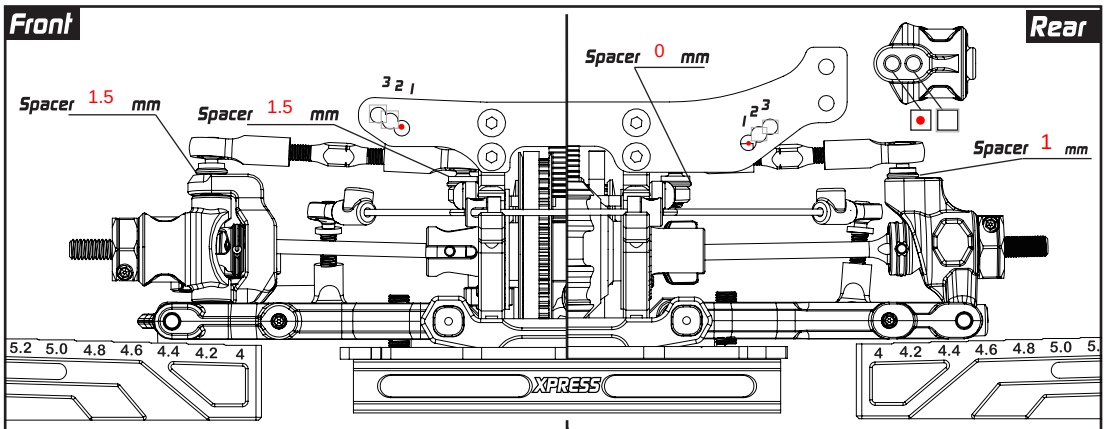

	Front	Rear
Hex Offset	4.5 mm	4.5 mm
Camber	3 °	2.5 °
Ride Height	5.0 mm	5.2 mm
DownStop	5.8 mm	4.8 mm
Sway Bar	1.3 mm	1.3 mm

Camber Link: ☐ M ☒ H
C-Hub: ☐ M ☒ H
Steering Block: ☐ M ☒ H
Suspension Arm: ☐ M ☒ H
Rear Hub: ☐ M ☒ H
Suspension Arm: ☐ M ☒ H
Camber Link: ☒ / ☐

Optional — On-Power Control System

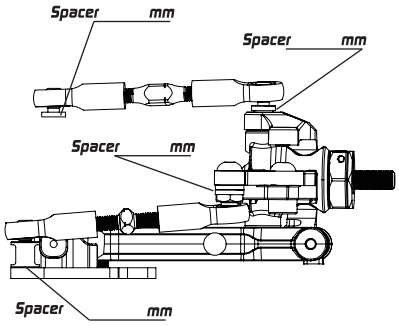

Hex Offset mm
Camber °
Ride Height mm
DownStop mm
Sway Bar 1.2 mm
Steering Block ☐ M ☐ H
Suspension Arm ☐ M ☐ H

Front / Rear

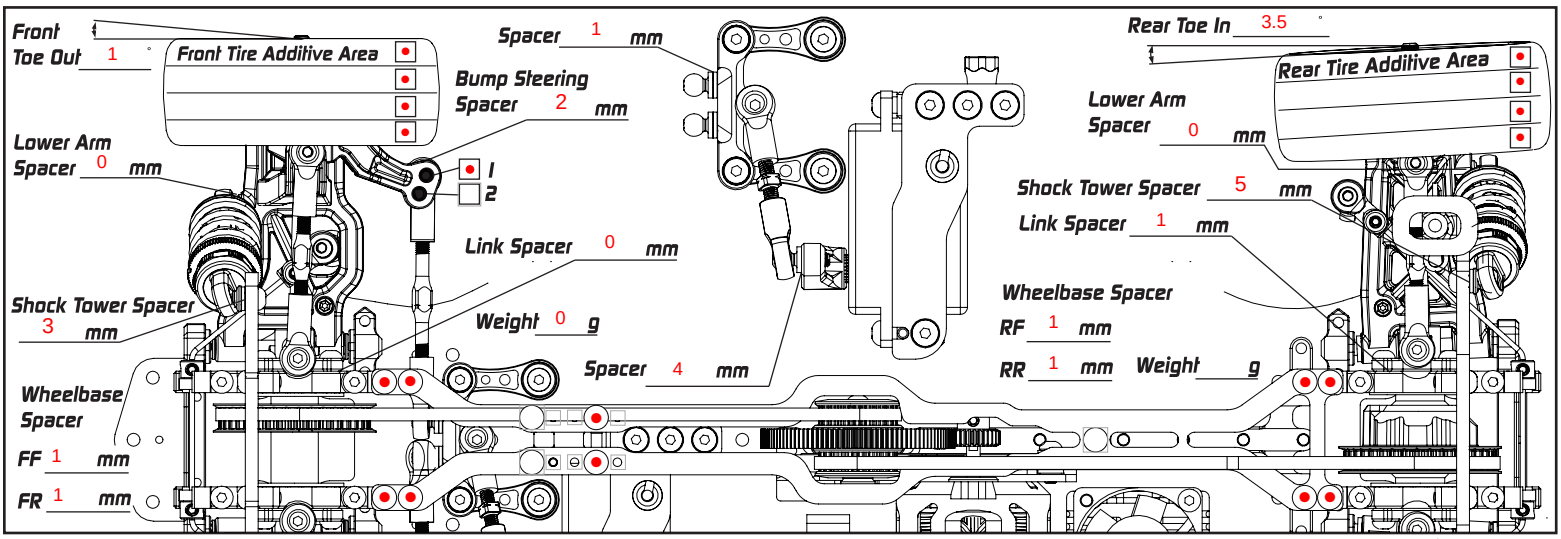

Suspension Mount Setup

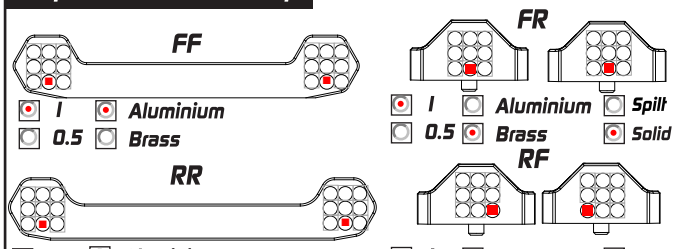

	FF	FR	RR	RF
1	☒ Aluminium	☒ Aluminium	☐ Aluminium	☐ Aluminium
0.5	☐ Brass	☐ Brass	☒ Brass	☒ Brass
		☐ Spilt / ☒ Solid		☐ Spilt / ☐ Solid

Flex Control

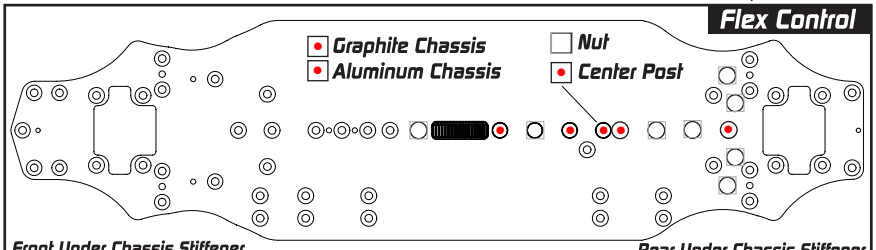

☒ Graphite Chassis
☒ Aluminum Chassis
☐ Nut
☒ Center Post

Front Under Chassis Stiffener
☒ None
☐ Graphite
☐ Brass

☒ Standard Battery
☒ Short Battery (Forward Position)
☐ Short Battery (Backward Position)

Rear Under Chassis Stiffener
☒ None
☐ Graphite
☐ Brass

Damper Setup

	Front	Rear
Spring	Yokomo 2.5- 2.8	Serpent Yellow
Oil	500	500
Rebound	normal	Normal
Piston	4	4
Length	10	10.5
Foam Insert	☐	☐
Hole In Cap	☒	☒

Transmission Setup

	Front	Rear
	Spool	Gear Diff
Oil		5000
Weight	g	1.0 g
Position	High	High

Others

Servo	SSL LH 2	Tires	Xpress V3 40
Esc	Maclan	Additive	Buggy Grip
Motor	Maclan 5.0	Body	JC A one 2
Spur	64 P/ 110 T	Rear Wing	JC
Pinon	64 P/ 29 T	FDR	7.206