XPRESS EXECUTE XQ1 SET-UP SHEET

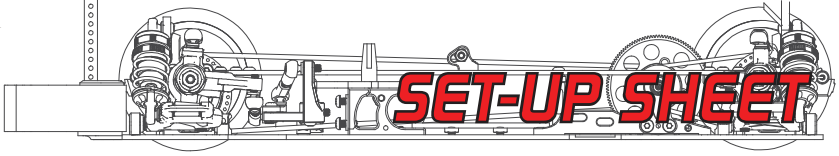

Driver _____ Surface Asphalt (Indoor/Outdoor) Carpet Smooth Bumpy Track Temperture _____

Date _____ Traction Low Medium High Dry Wet Result _____ Air Temperture _____

Track _____ Country _____ Best Lap _____ Humidity _____ Remark _____

Front

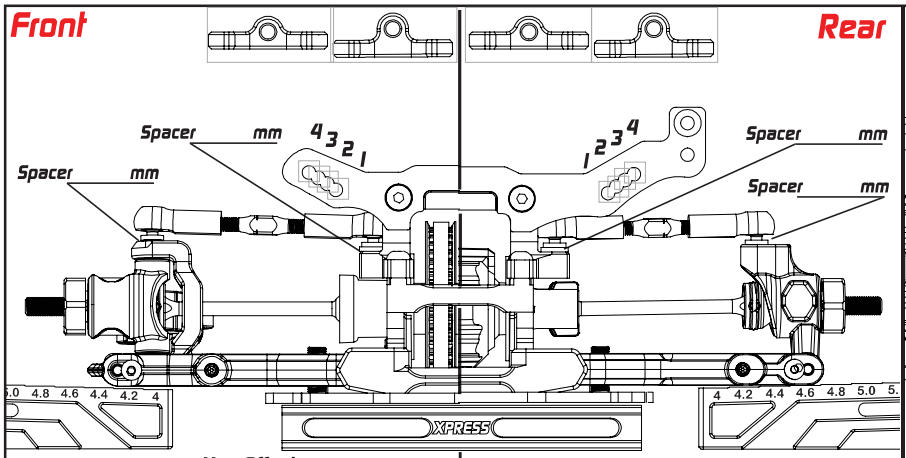

C-Hub
☐ M ☐ H

Steering Block
☐ M ☐ H

Suspension Arm
☐ M ☐ H

Hex Offset _____ mm _____ mm

Camber _____ ° _____ °

Ride Height _____ mm _____ mm

DownStop _____ mm _____ mm

Sway Bar _____ mm _____ mm

Rear

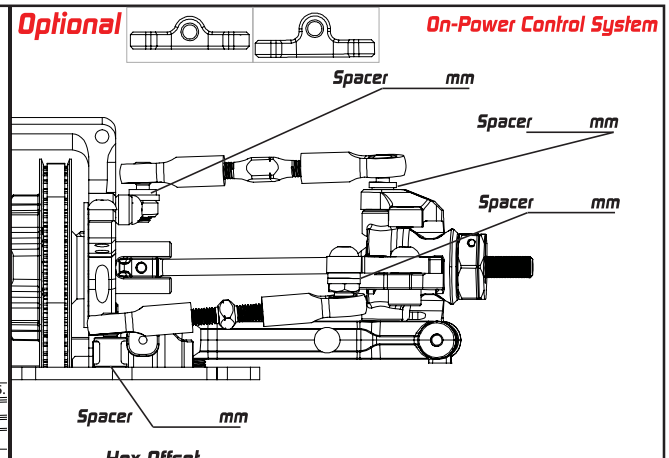

Rear Hub
☐ M ☐ H

Suspension Arm
☐ M ☐ H

Optional

On-Power Control System

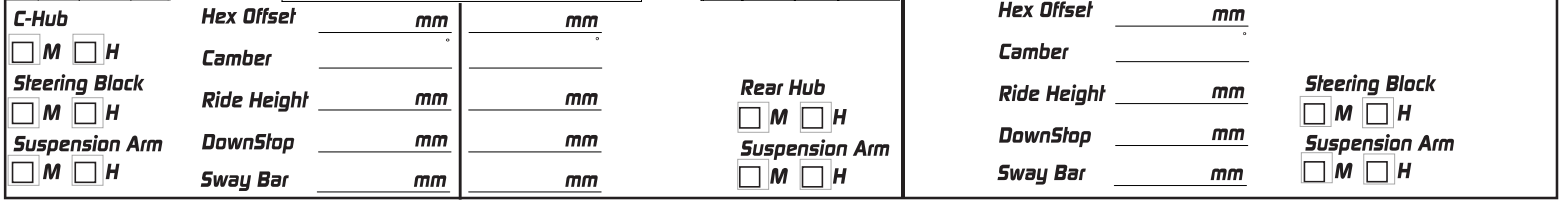

Hex Offset _____ mm

Camber _____ °

Ride Height _____ mm

DownStop _____ mm

Sway Bar _____ mm

Steering Block
☐ M ☐ H

Suspension Arm
☐ M ☐ H

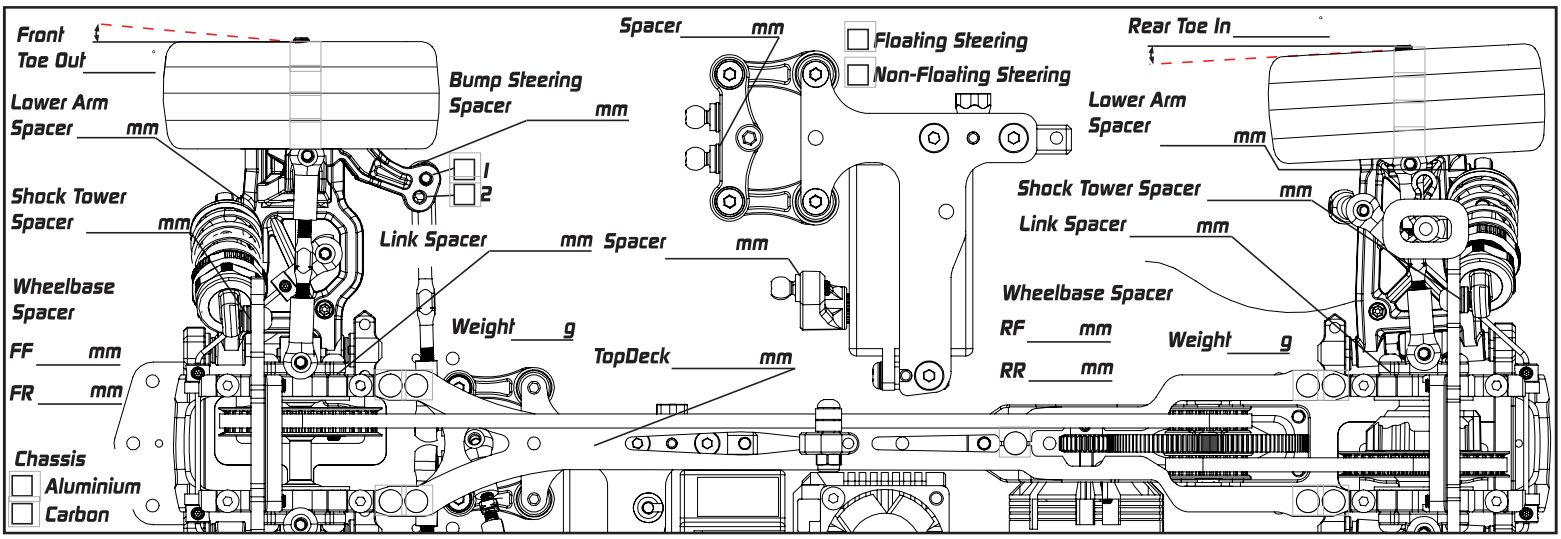

Suspension Mount Setup

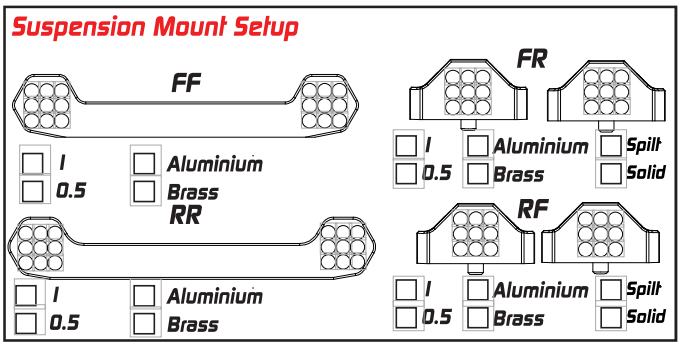

Center Line Flex Control

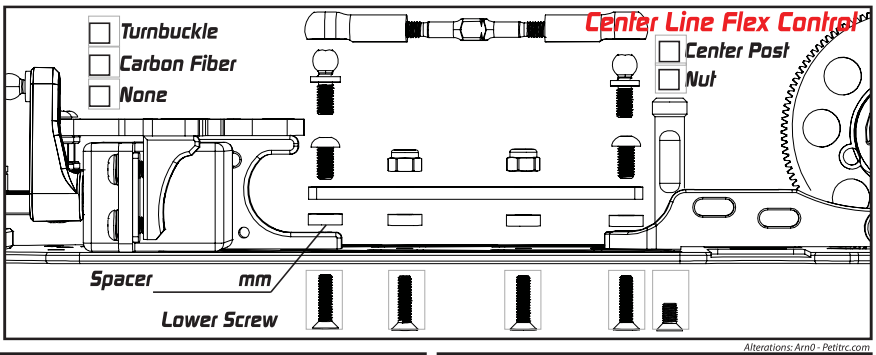

Alterations: Arn0 - Petitrc.com

Damper Setup

	Front	Rear
Spring		
Oil		
Rebound		
Piston		
Length		
Foam Insert	☐	☐
Hole In Cap	☐	☐

Transmission Setup

	Front	Rear
	Spool / Gear Diff	Gear Diff
Oil		
Weight	g	g
Position	Low / High	Low / High

Servo		Tires	
Esc		Additive	
Motor		Body	
Spur	P/ T	Rear Wing	
Pinon	P/ T	FDR	NaN