XPRESS EXECUTE FT1 SET-UP SHEET

Driver _____ Track Surface _____ Track Temperture _____

Date _____ Track Traction _____ Result _____ Air Temperture _____

Track _____ Country _____ Best Lap _____ Humidity _____ Remark _____

Front / Rear

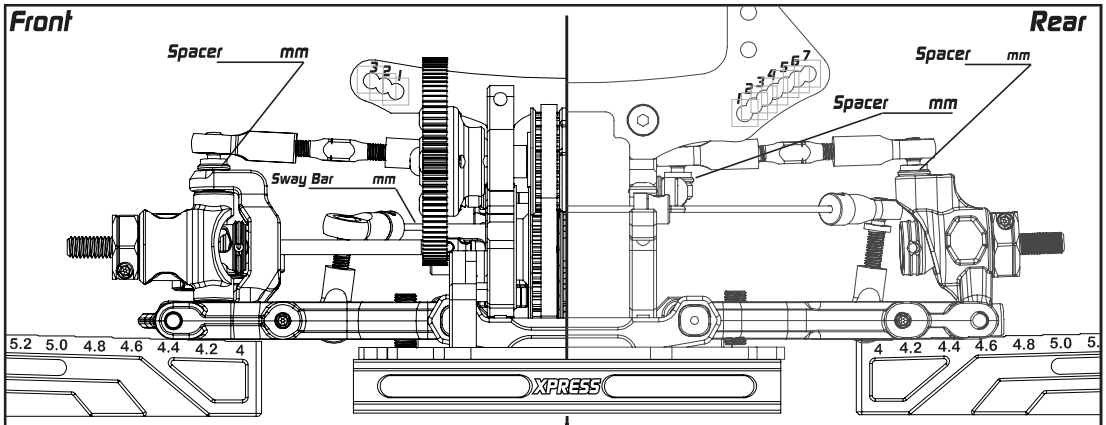

	Front	Rear
C-Hub ☐ M ☐ H	Hex Offset ____ mm	____ mm
	Camber ____ °	____ °
Steering Block ☐ M ☐ H	Ride Height ____ mm	____ mm
Suspension Arm ☐ M ☐ H	DownStop ____ mm	____ mm
	Sway Bar ____ mm	____ mm
		Rear Hub ☐ M ☐ H
		Suspension Arm ☐ M ☐ H

Optional — On-Power Control System

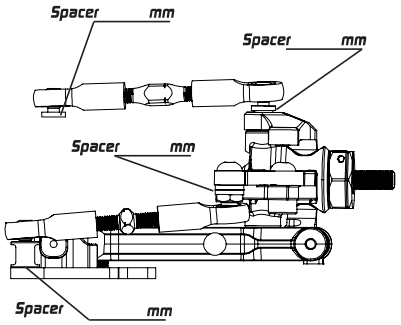

Hex Offset ____ mm

Camber ____ °

Ride Height ____ mm

DownStop ____ mm

Sway Bar ____ mm

Steering Block ☐ M ☐ H

Suspension Arm ☐ M ☐ H

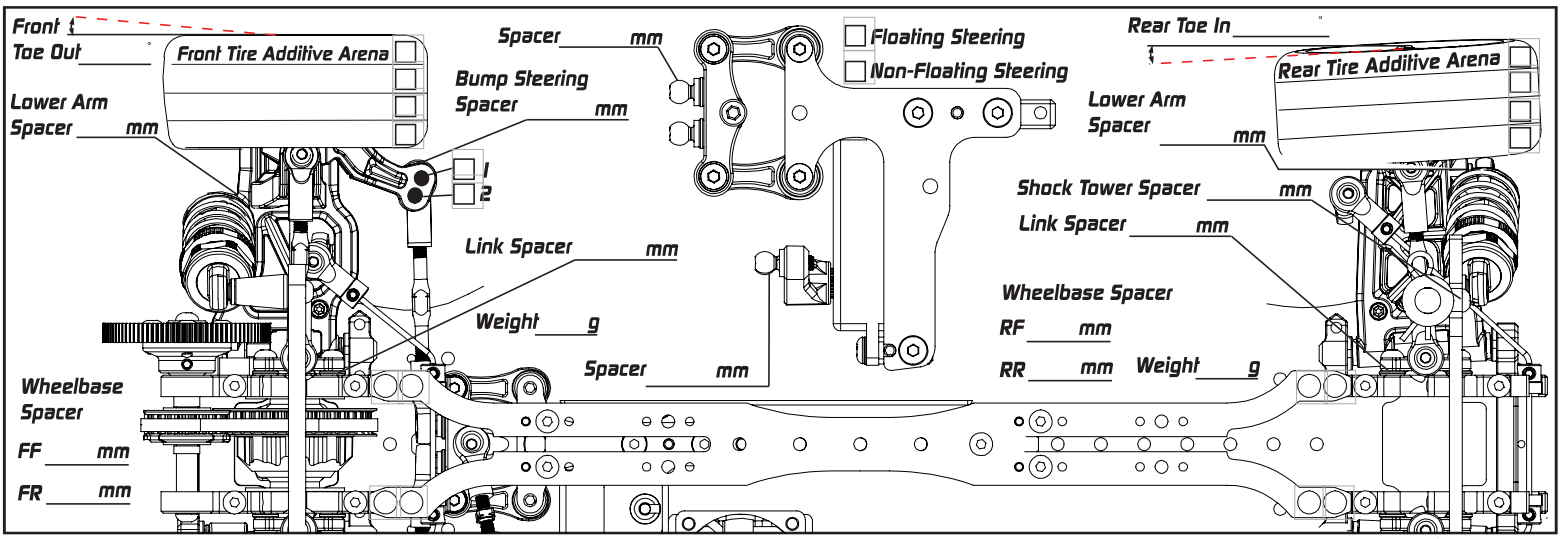

Suspension Mount Setup

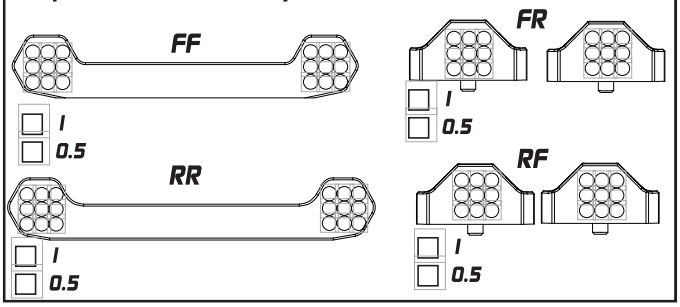

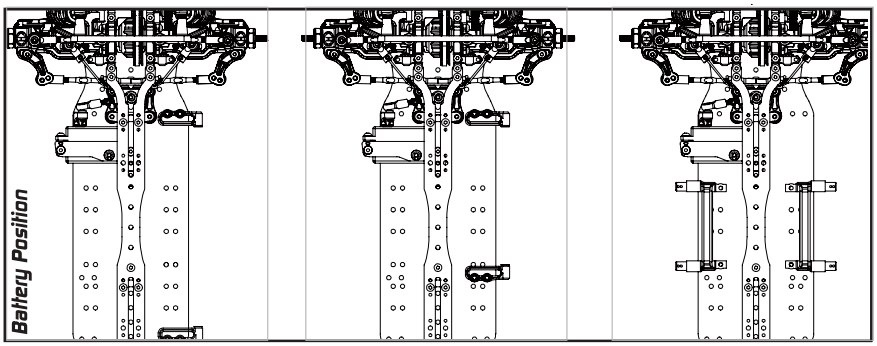

Damper Setup

	Front	Rear
Spring		
Oil		
Rebound		
Piston		
Length		
Foam Insert	☐	☐
Hole In Cap	☐	☐

Transmission Setup

Front

Gear Diff

Oil _____

Weight ____ g

Position _____

Others

Servo _____ Tires _____

Esc _____ Additive _____

Motor _____ Body _____

Spur ____ P/ ____ T Rear Wing _____

Pinon ____ P/ ____ T FDR _____

NOTES

ARTO - PETITRO