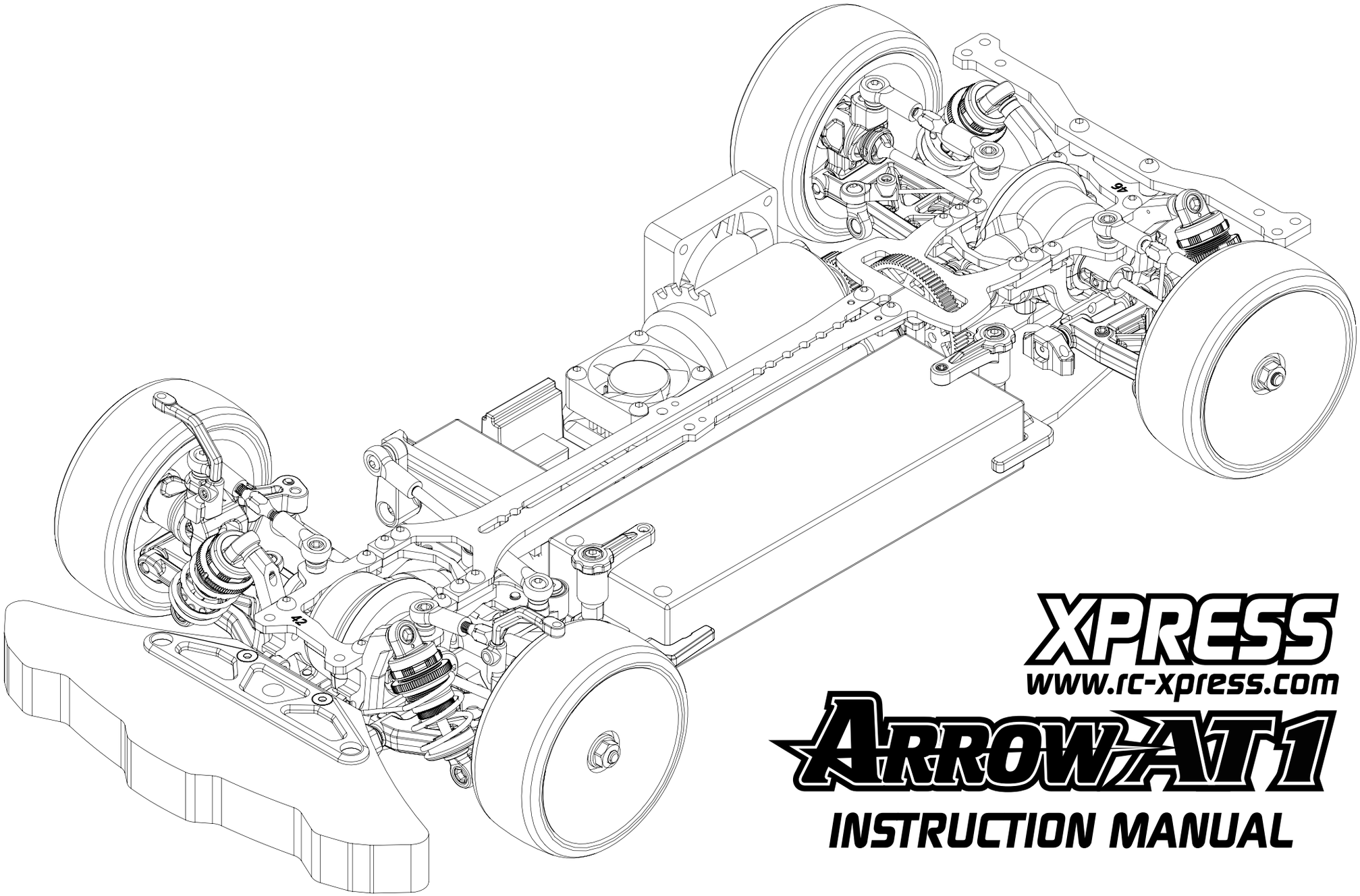

XPRESS

www.rc-xpress.com

ARROW AT1

INSTRUCTION MANUAL

1. Turnbuckle Assembly

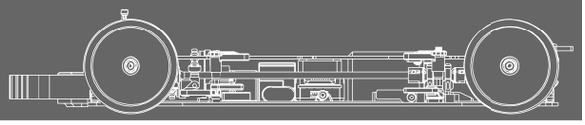

Bag A

Steel Turnbuckle M3x50mm
XP-10924

Steel Turnbuckle M3x39mm
XP-10157

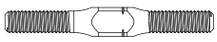

Steel Turnbuckle M3x29mm
XP-10156

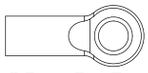

4.8mm Flat Type Ball End 15mm
XP-10636

For Servo

1x

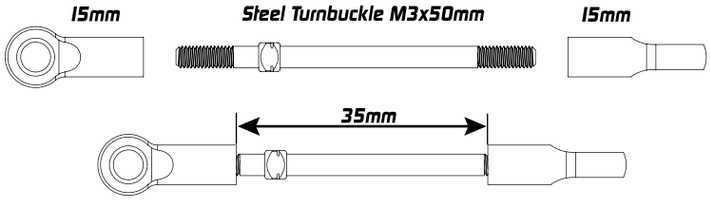

For Steering

2x

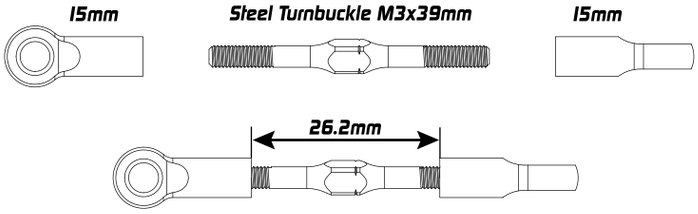

For Front Camber Link

2x

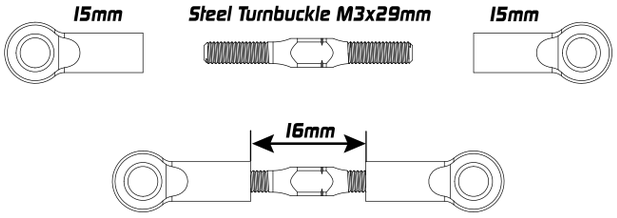

For Rear Camber Link

2x

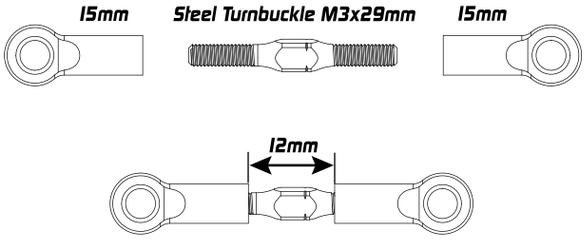

XPRESS
www.rc-xpress.com

2. Gear Diff Assembly

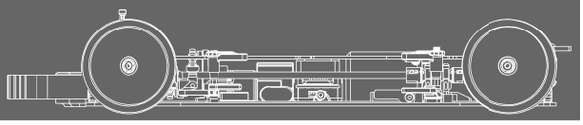

Bag B / HW / Bearing Bag

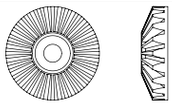

Bevel Gears (Big)
XP-10836 / XP-10884

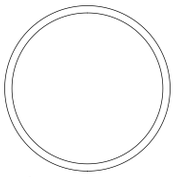

O-ring 21x1mm
XP-10836 / XP-10888

Bevel Gears (Small)
XP-10836 / XP-10884

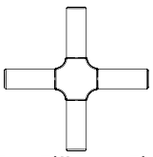

Gear Diff Cross Pin
XP-10836 / XP-10884

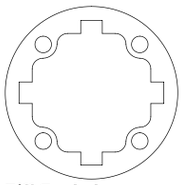

Diff Gasket
XP-10836 / XP-10860

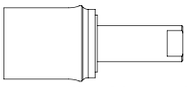

Gear Diff Outdrive Adapter (Long)
XP-10836 / XP-10887
Optional : XP-10941

Gear Differential Case
XP-10836 / XP-10885

Gear Diff Outdrive Adapter (Short)
XP-10836 / XP-10887
Optional : XP-10941

Bearing 8 x 12 x 3.5mm
XP-40196

Steel Shim 5 x 13 x 0.3mm
XP-10836 / XP-10886

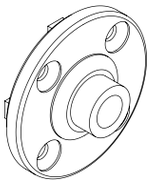

Gear Differential Cover
XP-10836 / XP-10885

Steel Shim 8x10x0.1mm
XP-40198

Steel Shim 3x5.0x0.2mm
XP-10836 / XP-10886

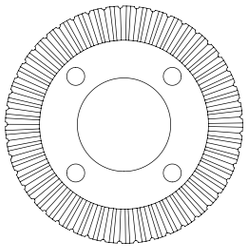

Bevel Gear Set 40T
XP-10836 / XP-10939

O-ring 5 x 2mm
XP-10836 / XP-10930

Flat Head Screw M2.5 x 8mm
XP-10836 / XP-10886 / XP-40044

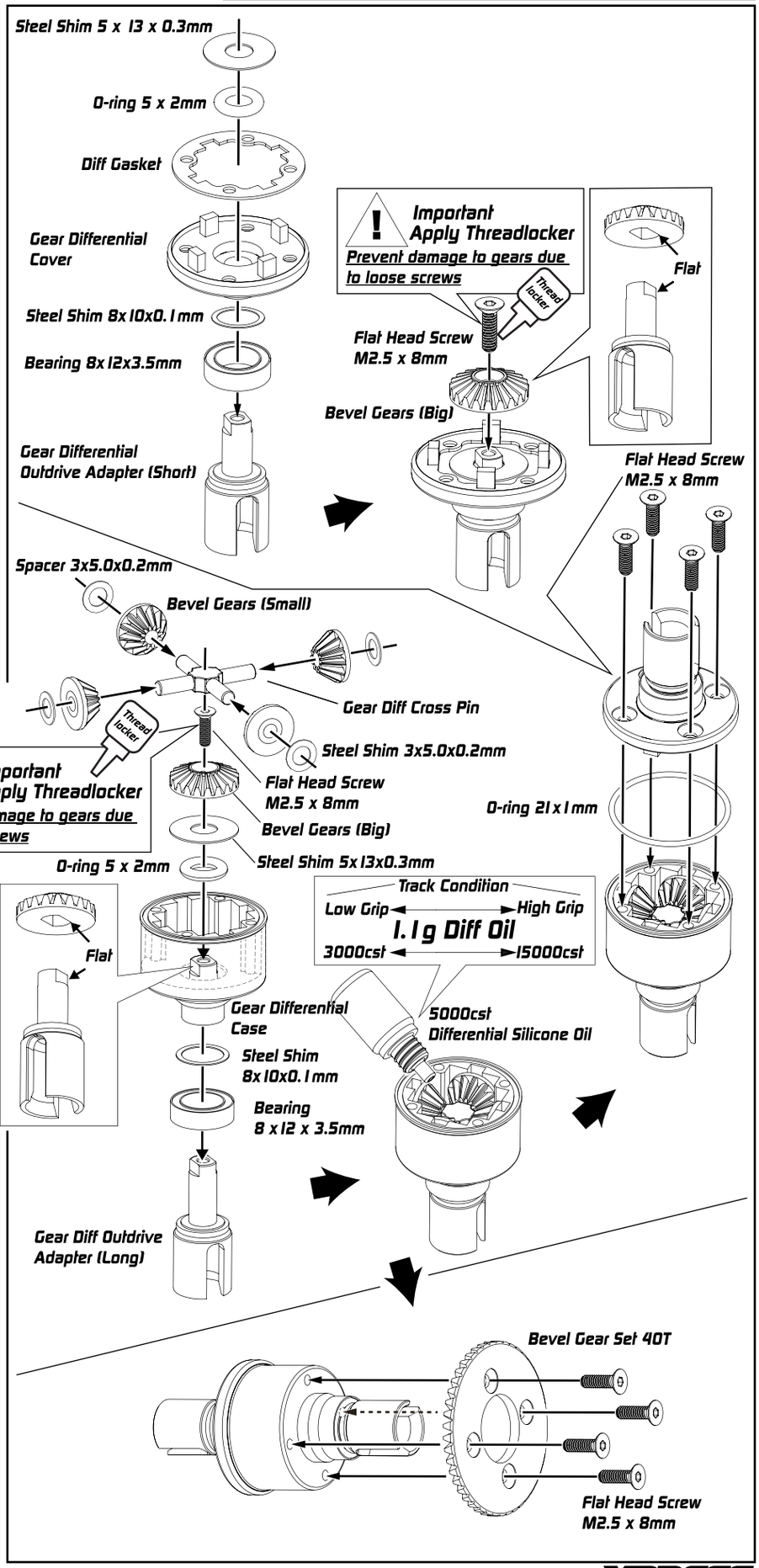

XPRESS
www.rc-xpress.com

3. Spool & Propeller Shaft Assembly

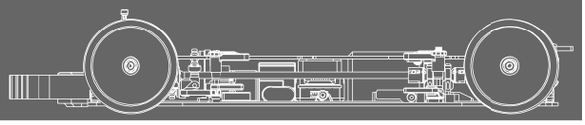

Bag C , D / HW Bag

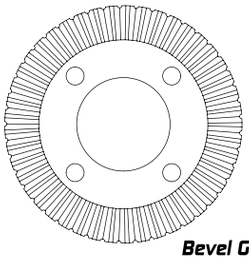

Bevel Gear Set 40T/17T
XP-10939

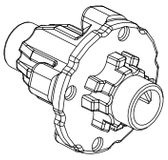

Shaft Driven Spool Set
XP-10847

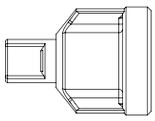

Shaft Driven Spool Set
XP-10847 / XP-10871
Optional : XP-10962

Ball Bearing 5x12x4.0mm
XP-40195

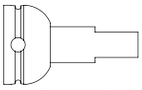

Propeller Shaft Axle
XP-10703
Optional : XP-10942

Ball Bearing 8x12x3.5mm
XP-40196

Couplers
XP-10703 / XP-40202

Steel Shim 8x10x0.1mm
XP-40198

Flat Head Hex Screw 2.5x8mm
XP-40044

Flat Head Hex Screw 3x8mm
XP-40048

Flat Head Hex Screw M2.5x15mm
XP-40200

Hex Set Screw M3x2mm
XP-40051

Universal Shaft Ring 11.8x0.8mm
XP-40201

Steel Pin 2.5x10mm(Flat)
XP-40172

Steel Pin 2X9.8mm
XP-40069

Front Propeller Shaft
XP-10703 Optional : XP-10938

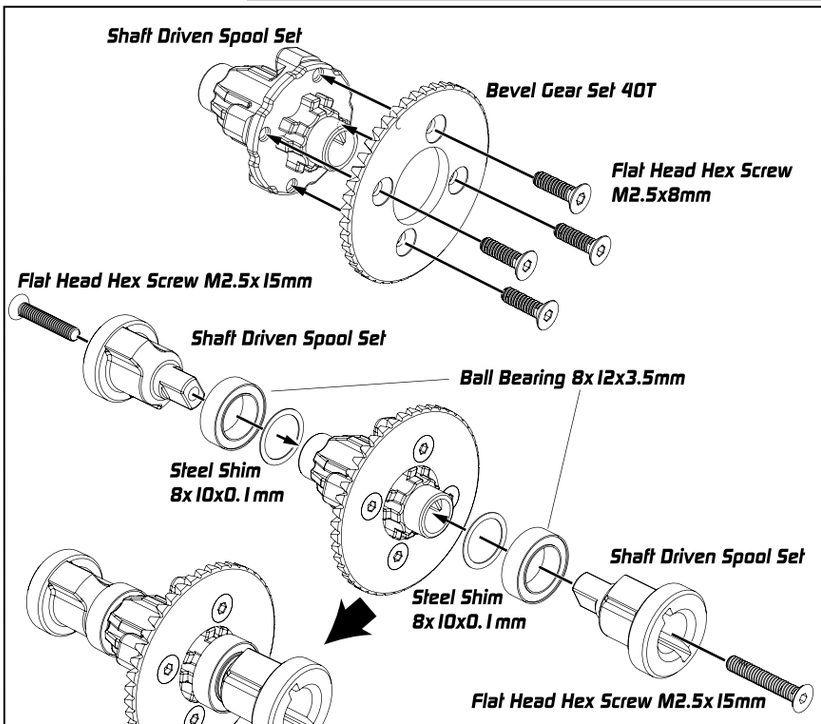

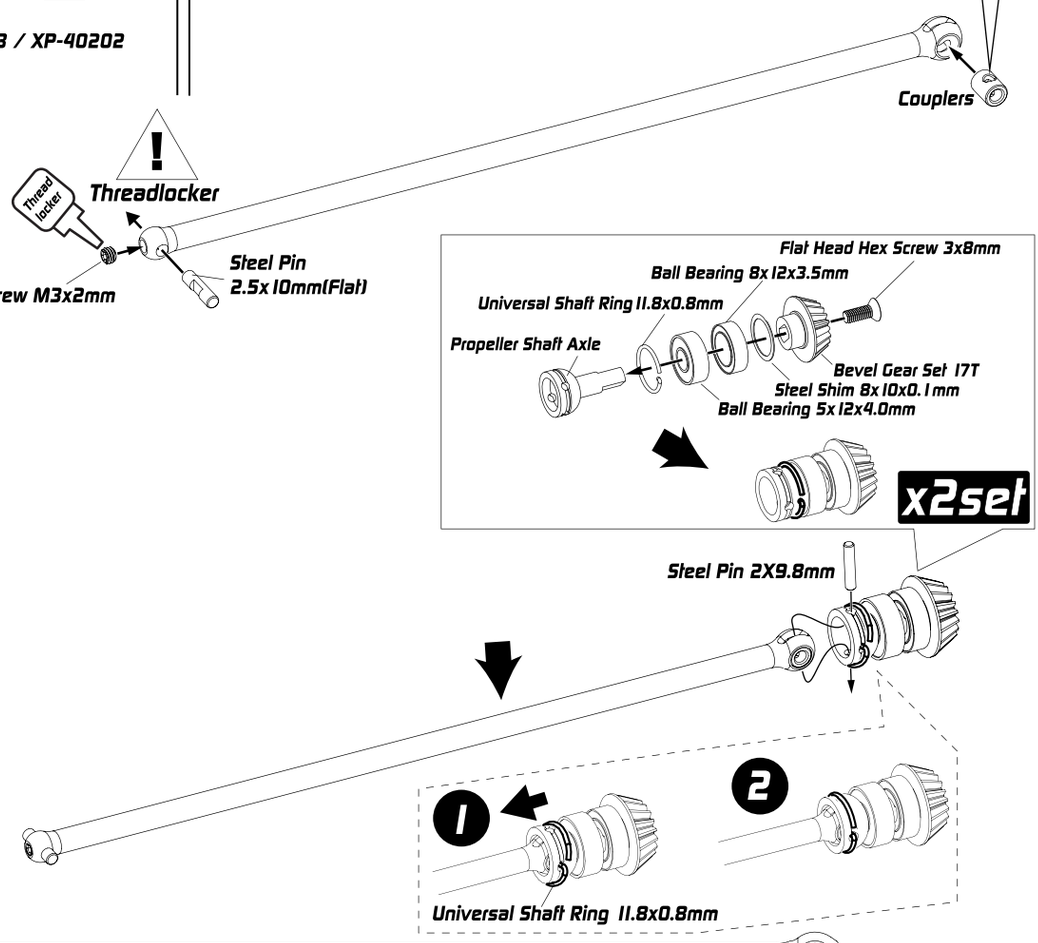

XPRESS
www.rc-xpress.com

4. Propeller Shaft & Gear Box Assembly

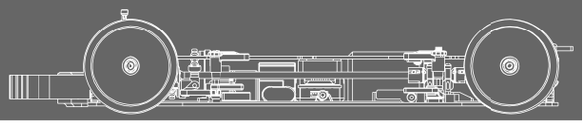

Bag D , E / HW Bag

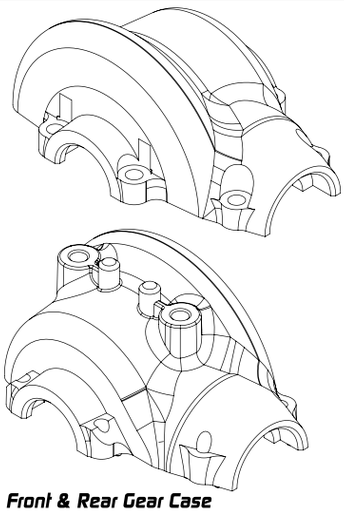

Front & Rear Gear Case
XP-10701

Button Head Hex Screw 2.5x7mm
XP-40115

Hex Set Screw M3x2mm
XP-40051

Steel Pin 2X9.8mm
XP-40069

Steel Pin 2.5x10mm(Flat)
XP-40172

Couplers
XP-10703 / XP-40202

Rear Propeller Shaft
XP-10993

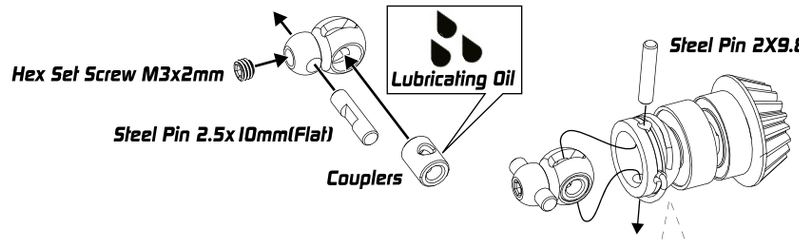

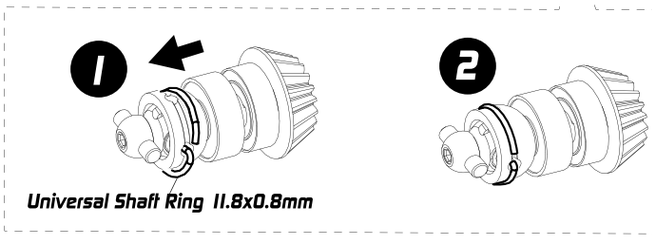

Completed Propeller Shaft

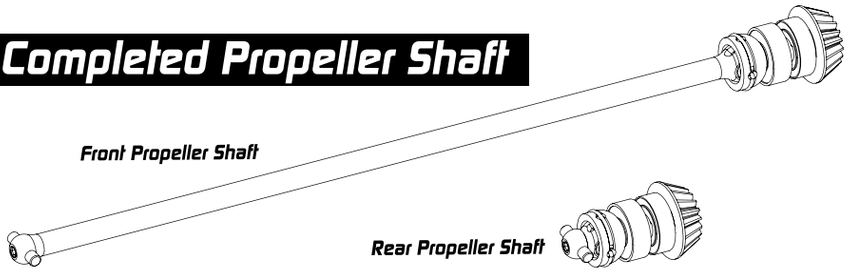

Rear Gear Box Unit

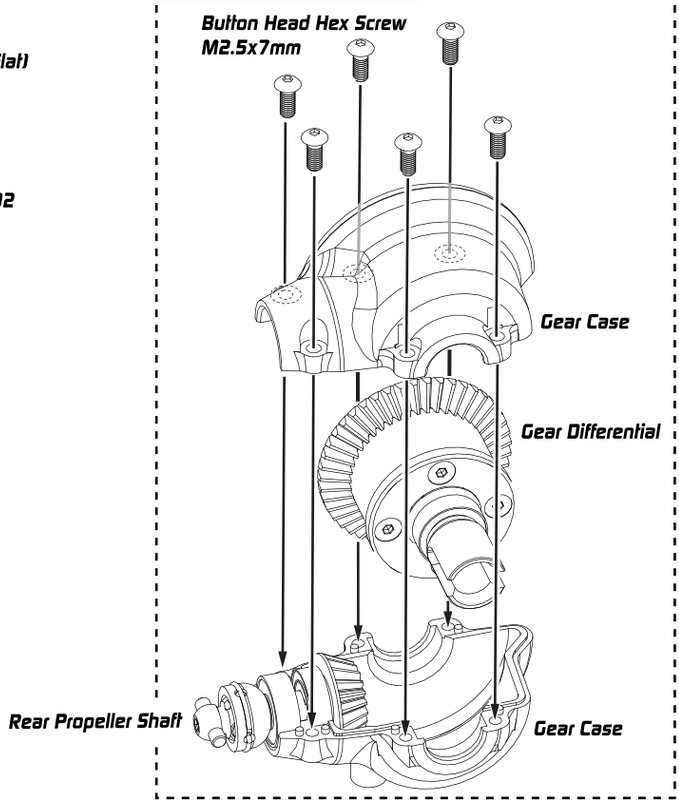

Front Gear Box Unit

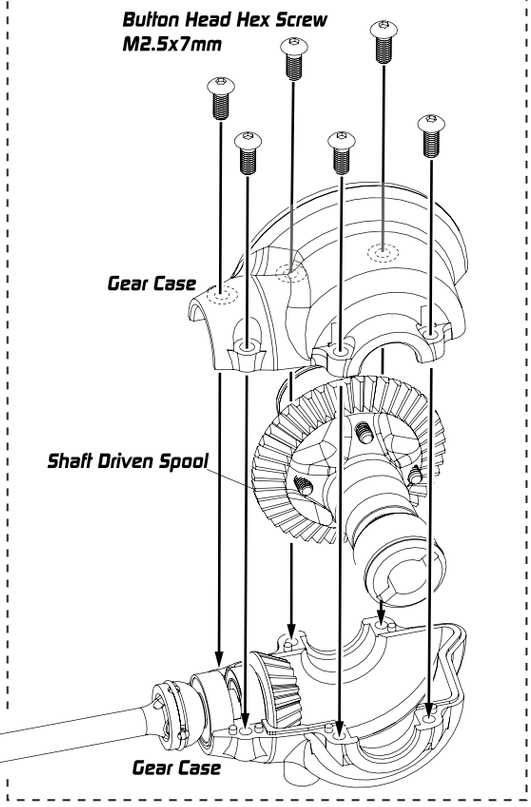

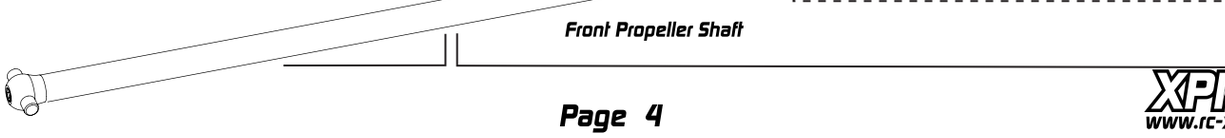

XPRESS
www.rc-xpress.com

5. Motor Mount Assembly

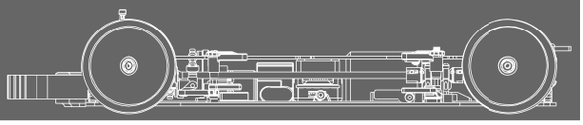

Bag F, G / HW Bag

Composite Spur Gear 64P 94T
XP-40122

Aluminum Spur Gear Mount
XP-10854

Propeller Shaft Joint Cup (Long) XP-10704

Propeller Shaft Joint Cup (Short) XP-10872

Steel Shim 5x7.0x0.2mm
XP-40086

Set Screw M3x2mm
XP-40051

Ball Bearing 5x9x3mm
XP-40062

Spur Gear Mount Plate
XP-10848

Steel Pin 2.5x9mm
XP-40171

Universal Shaft Ring 10.6x0.8mm
XP-40202

Button Head Hex Screw M2.5x7mm
XP-40115

Thin Head Hex Screw M3x4mm
XP-40191

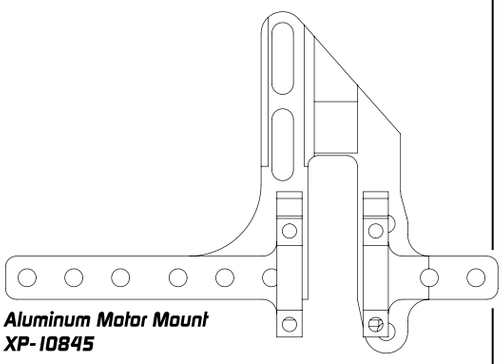

Aluminum Motor Mount
XP-10845

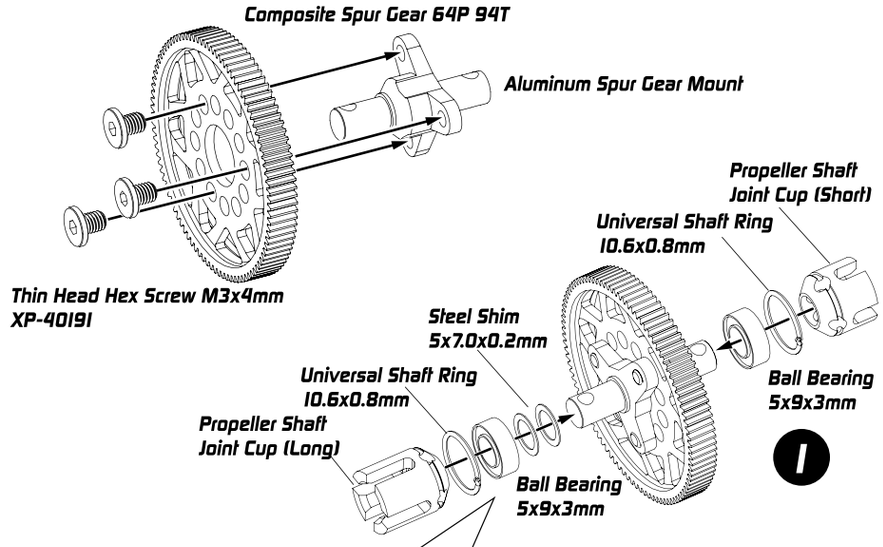

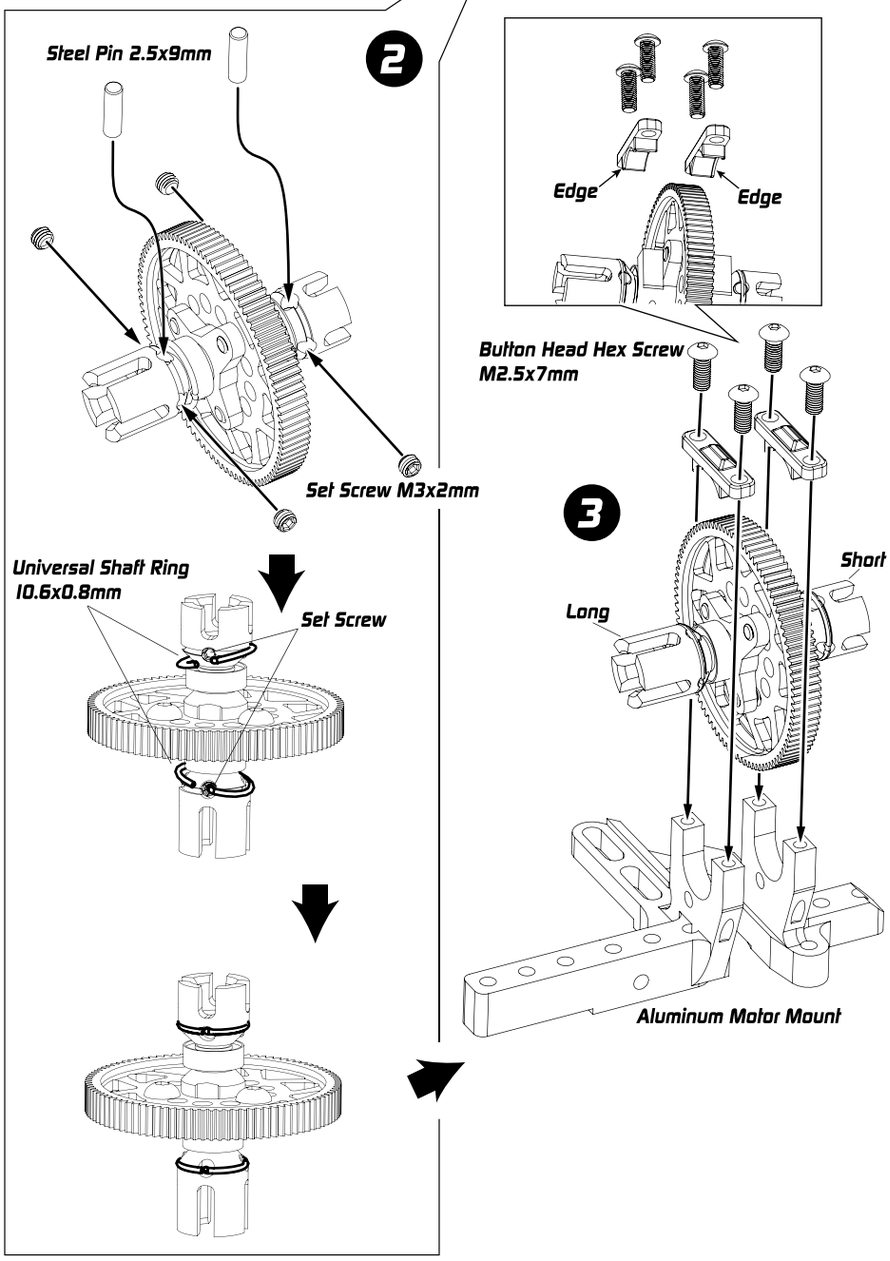

XPRESS
www.rc-xpress.com

6. Shaft Driven System Assembly

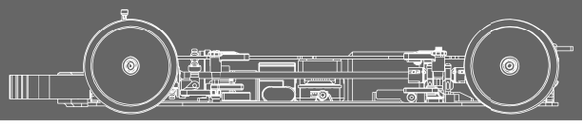

Bag F / Chassis Bag / HW Bag

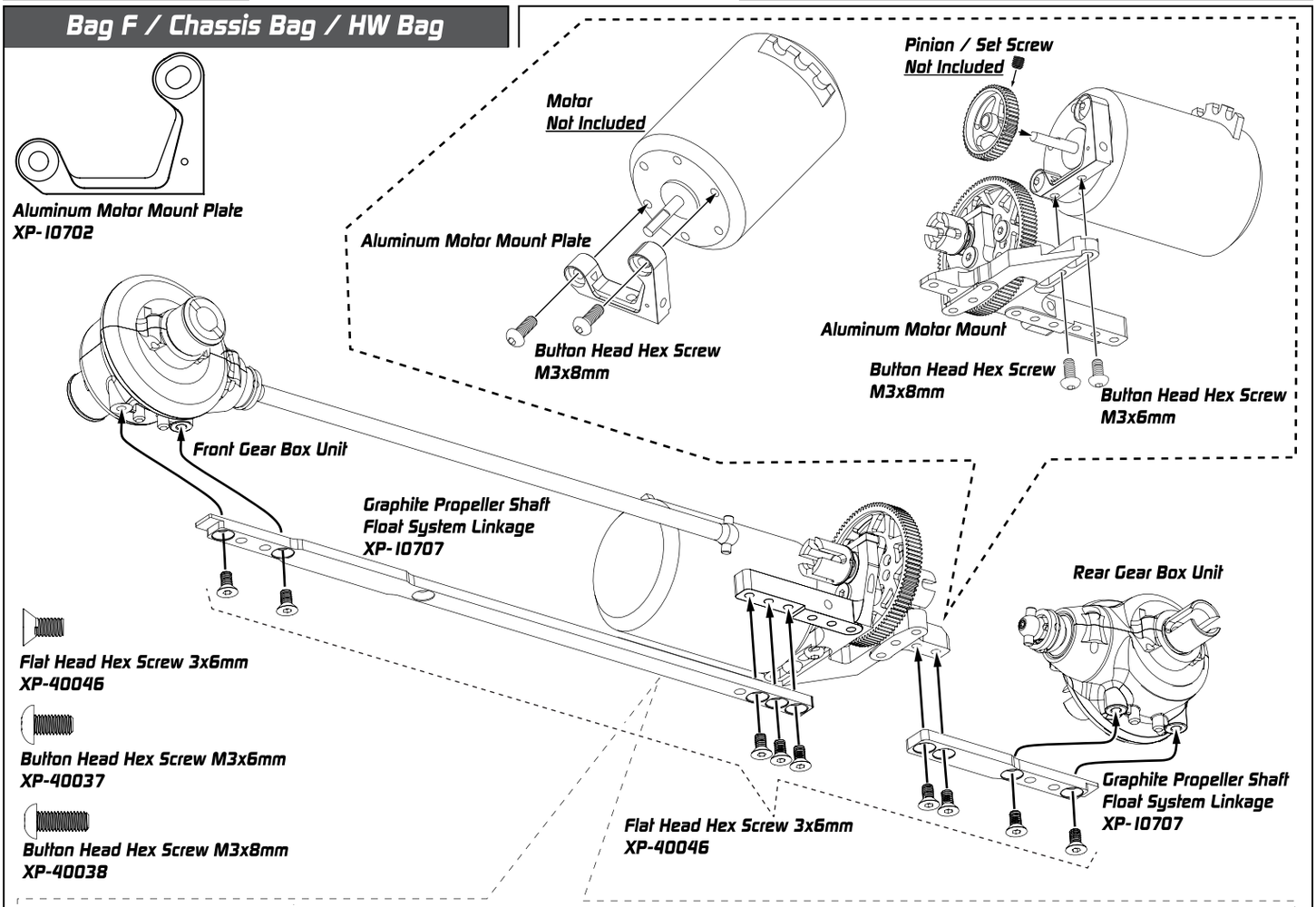

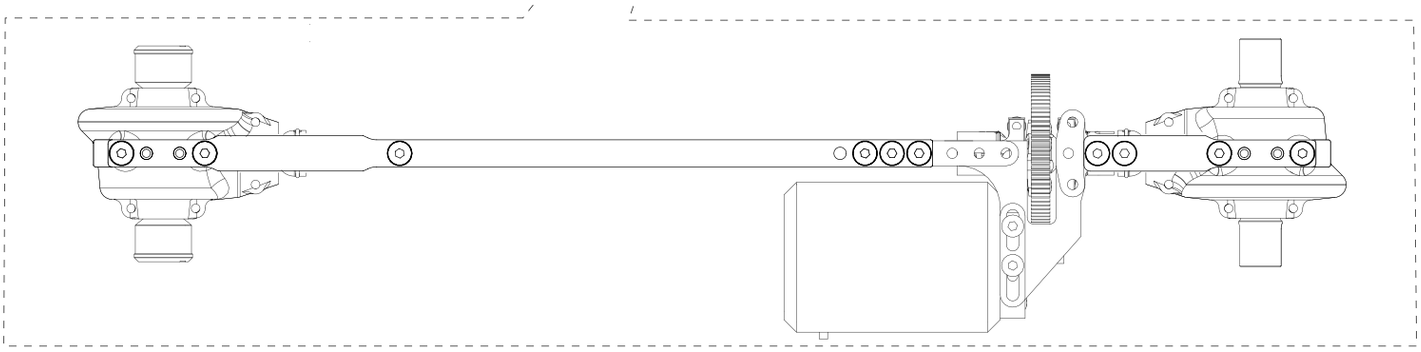

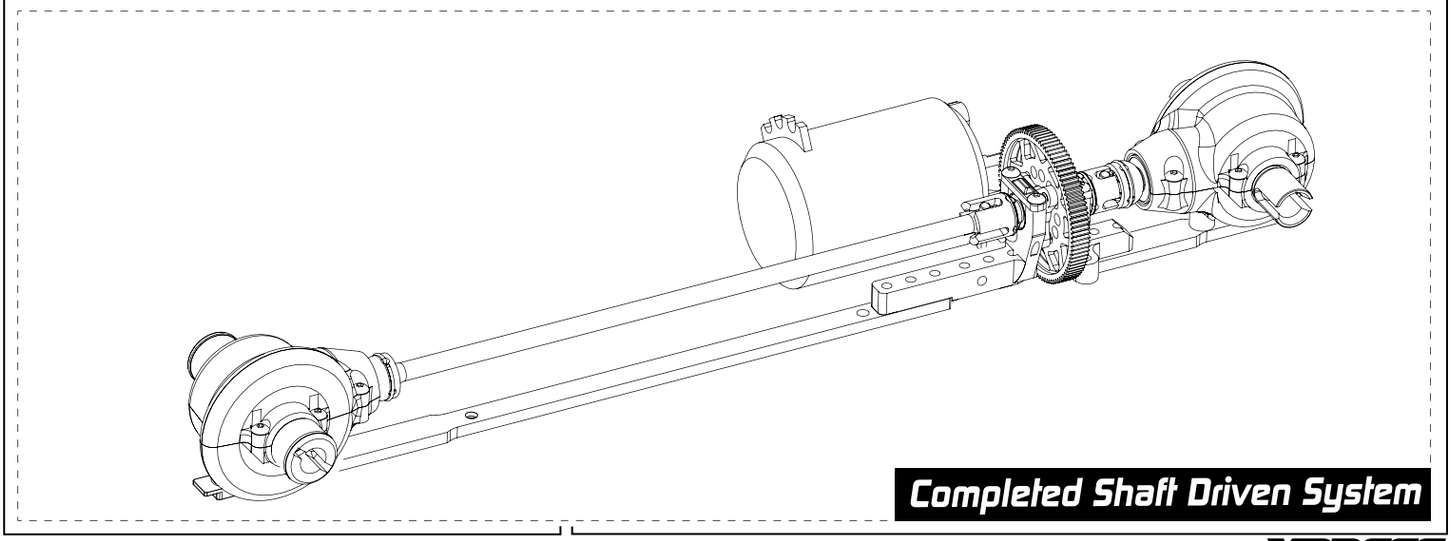

Completed Shaft Driven System

XPRESS
www.rc-xpress.com

7. Bulkhead & Suspension Assembly

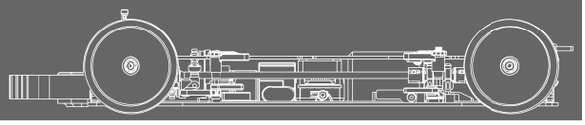

Bag G, H, I, N / Chassis Bag / HW Bag

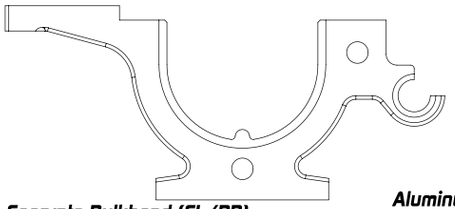

Separate Bulkhead (FL/RR)
XP-10850

Aluminum 2 Piece Suspension Mount
XP-10123

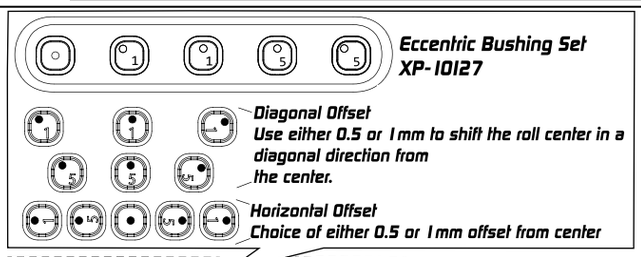

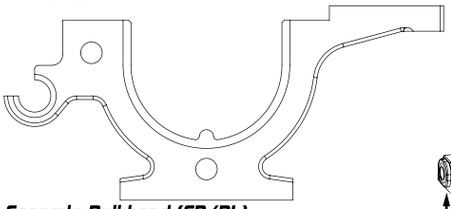

Separate Bulkhead (FR/RL)
XP-10815

4X

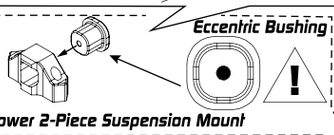

Aluminum Lower 2-Piece Suspension Mount

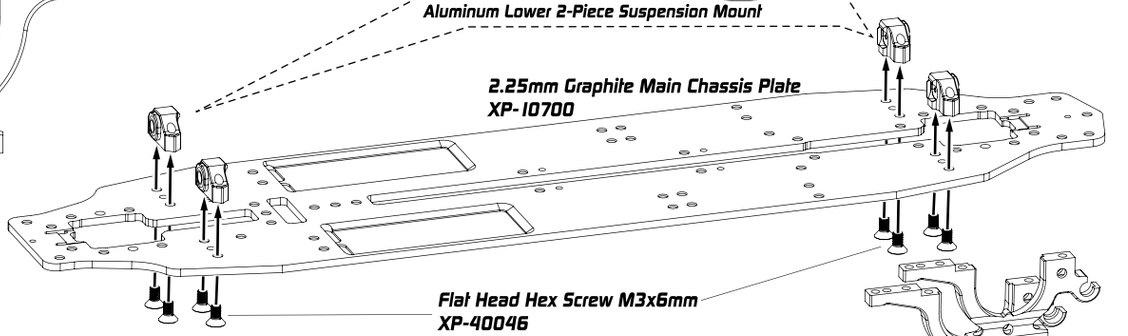

2.25mm Graphite Main Chassis Plate
XP-10700

Flat Head Hex Screw M3x6mm
XP-40046

Flat Head Hex Screw M3x6mm
XP-40046

Button Head Hex Screw M3x8mm
XP-40038

4.8mm Ball 6mm Thread
XP-10149

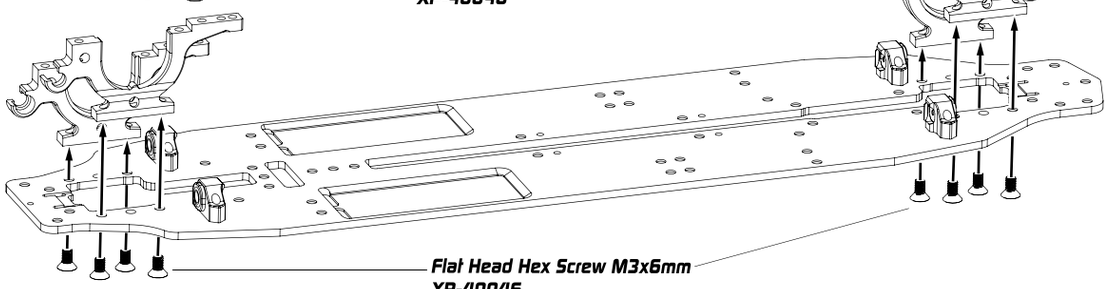

Plastic Servo Spacer
XP-10848

Flat Head Hex Screw M3x6mm
XP-40046

Front

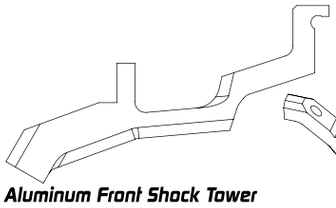

Aluminum Front Shock Tower
XP-10851

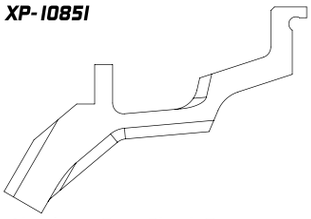

Aluminum Rear Shock Tower
XP-10816

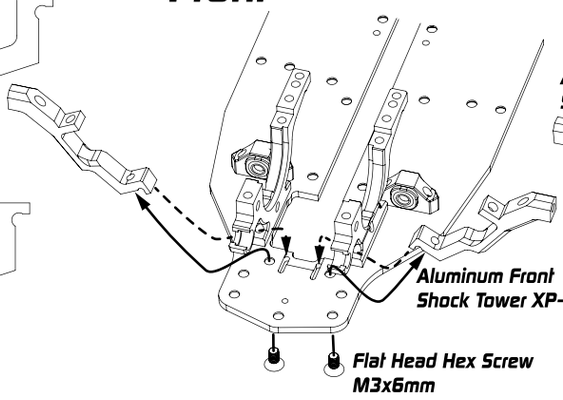

Rear

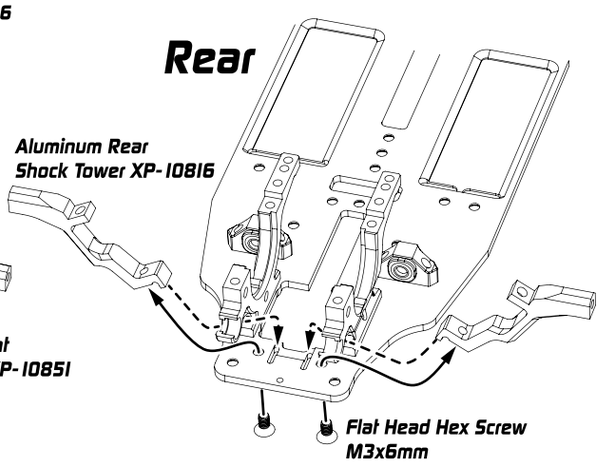

Servo unit

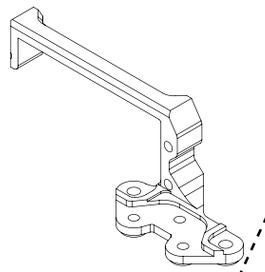

Aluminum Servo Mount
XP-10706

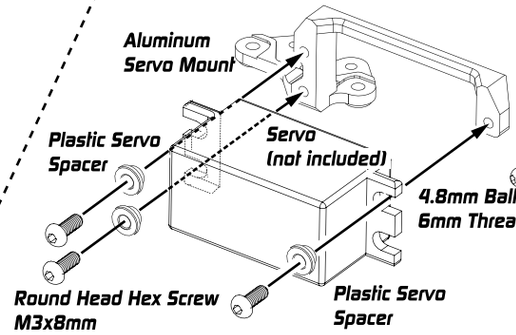

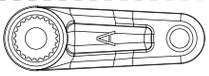

Servo Horn 23T for Sanwa, KO
XP-10163

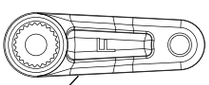

Servo Horn 25T for Futaba
XP-10163

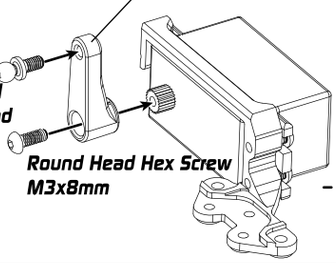

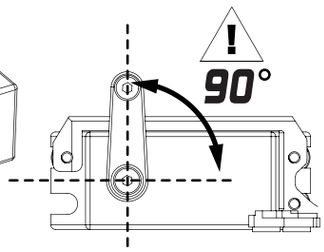

XPRESS
www.rc-xpress.com

8. Driven System & Steering Assembly

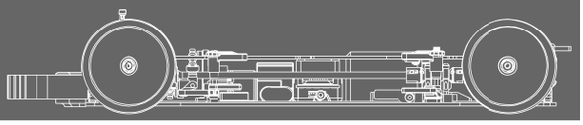

Bag G, I / Bearing Bag / HW Bag

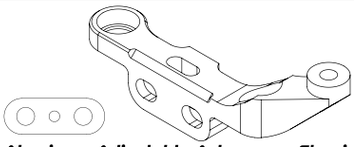

Aluminum Adjustable Ackermann Steering
XP-10838 / XP-10859

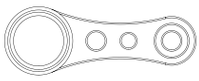

Aluminum 18.5mm Dual Servo Saver Arm
XP-10650

Aluminum Steering Post
XP-10705

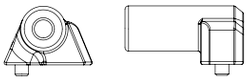

Plastic Battery Stopper
XP-10848
Option: XP-10709

Ball Bearing 3x6x2.5mm
XP-40060

Ball Bearing 5x8x2.5mm
XP-40061

Aluminum Shim 3x5.5x1.0mm
XP-10240

Aluminum Shim 3x5.5x2.0mm
XP-10241

4.8mm Ball 6mm Thread
XP-10149

Flat Head Hex Screw M3x6mm
XP-40046

Flat Head Hex Screw M3x10mm
XP-40049

Button Head Hex Screw M3x6mm
XP-40037

Button Head Hex Screw M3x4mm
XP-40191

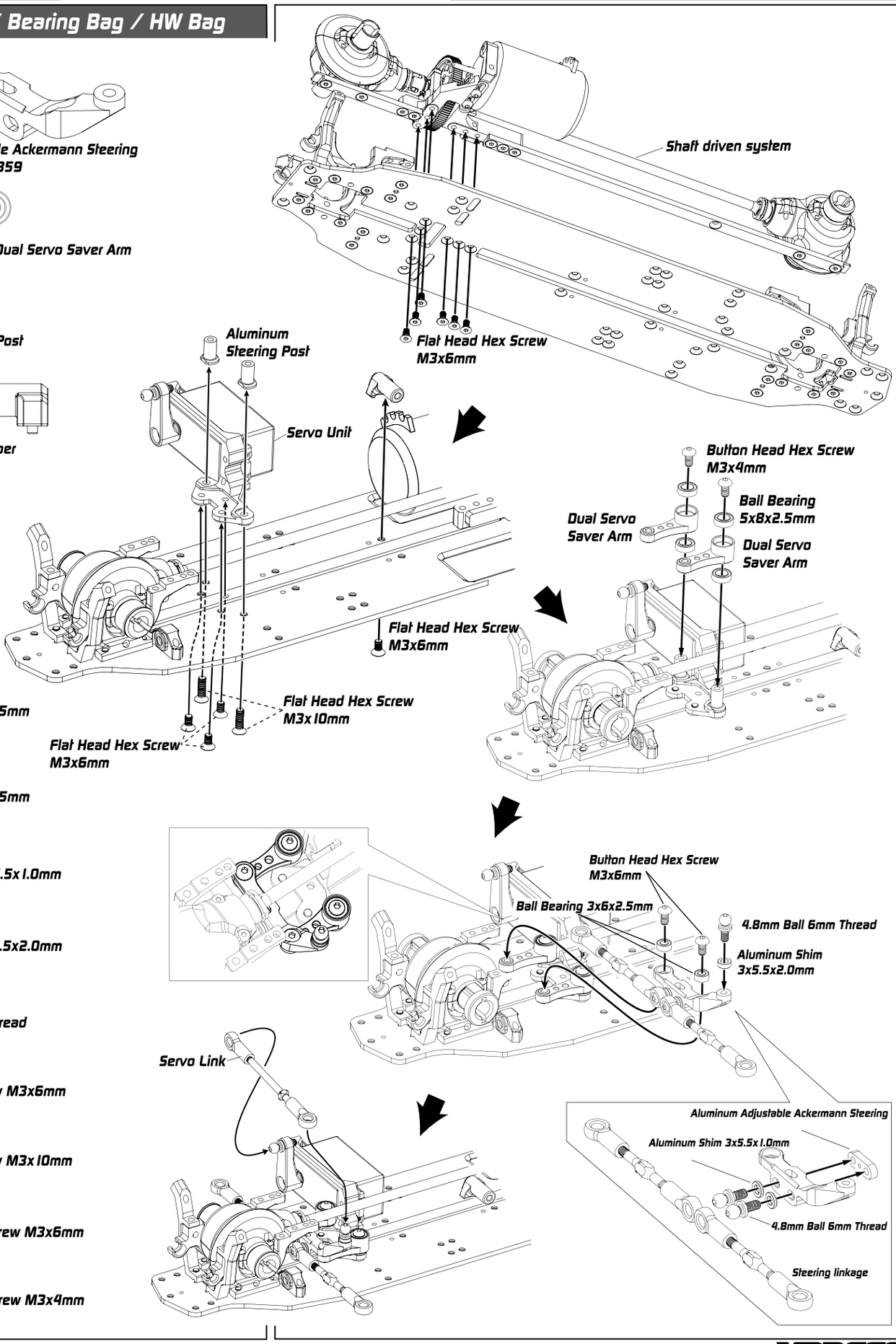

XPRESS
www.rc-xpress.com

9. Upper Deck & Camberlink Plate Assembly

Bag J , K / HW Bag / Chassis Bag

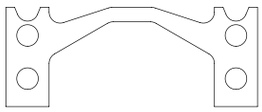

Graphite Upper Deck Spacer
XP-10837

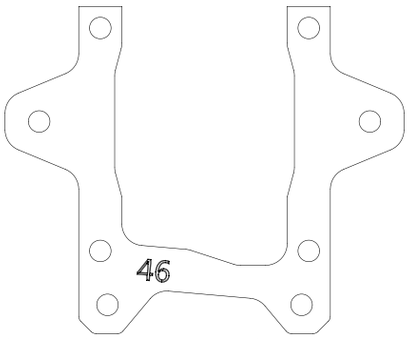

Graphite Camberlink Plate (46mm)
XP-10898

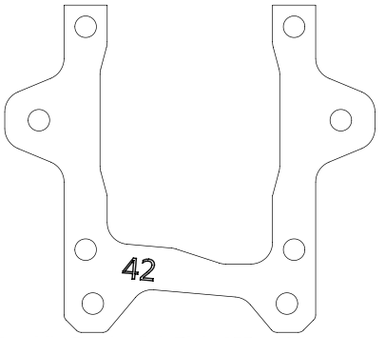

Graphite Camberlink Plate (42mm)
XP-10856

Aluminum Shim 3x5.5x2.0mm
XP-10241

Aluminum Shim 3x5.5x2.5mm
XP-40158

Aluminum Shim 3x5.5X5.0mm
XP-40156

Lock Nut 5.5mm
XP-40067

Flat Head Hex Screw M3x8mm
XP-40048

4.8mm Ball Inner Thread
XP-10045

Button Head Hex Screw M3x6mm
XP-40037

Button Head Hex Screw M3x8mm
XP-40038

Button Head Hex Screw M3x16mm
XP-40042

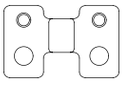

Composite Upper Deck Stiffener
XP-10643
Option: XP-10566

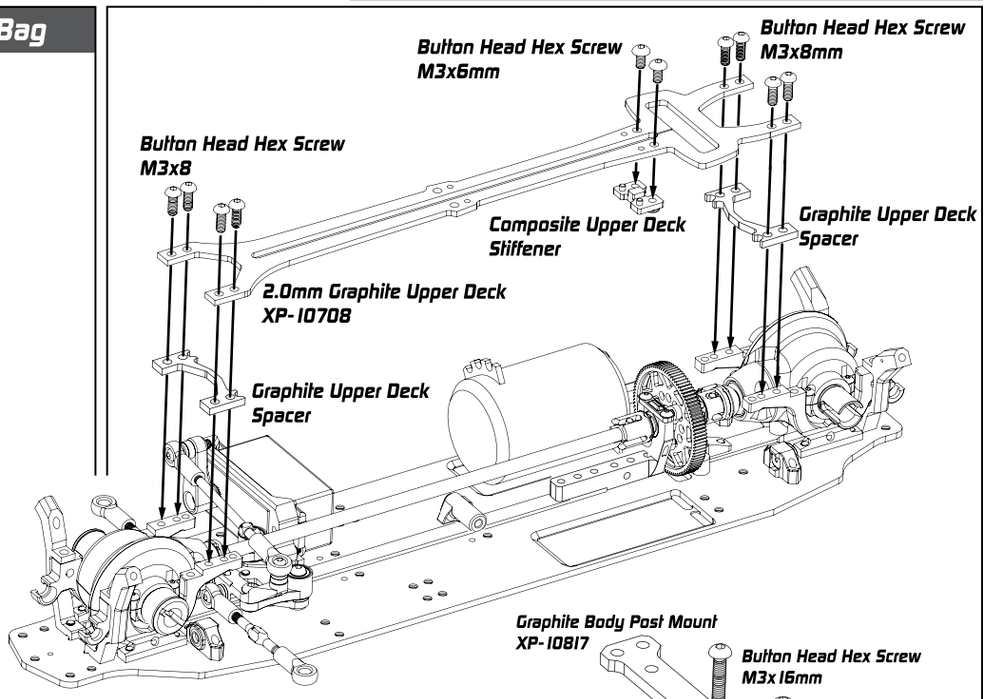

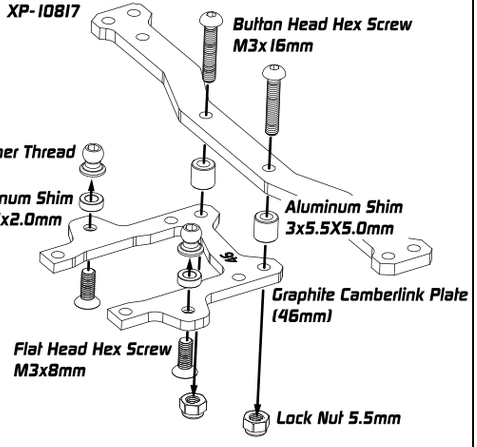

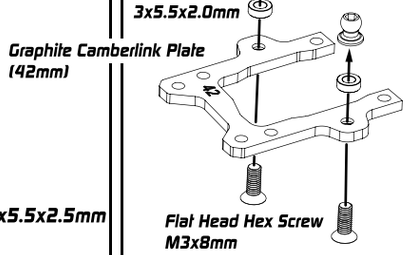

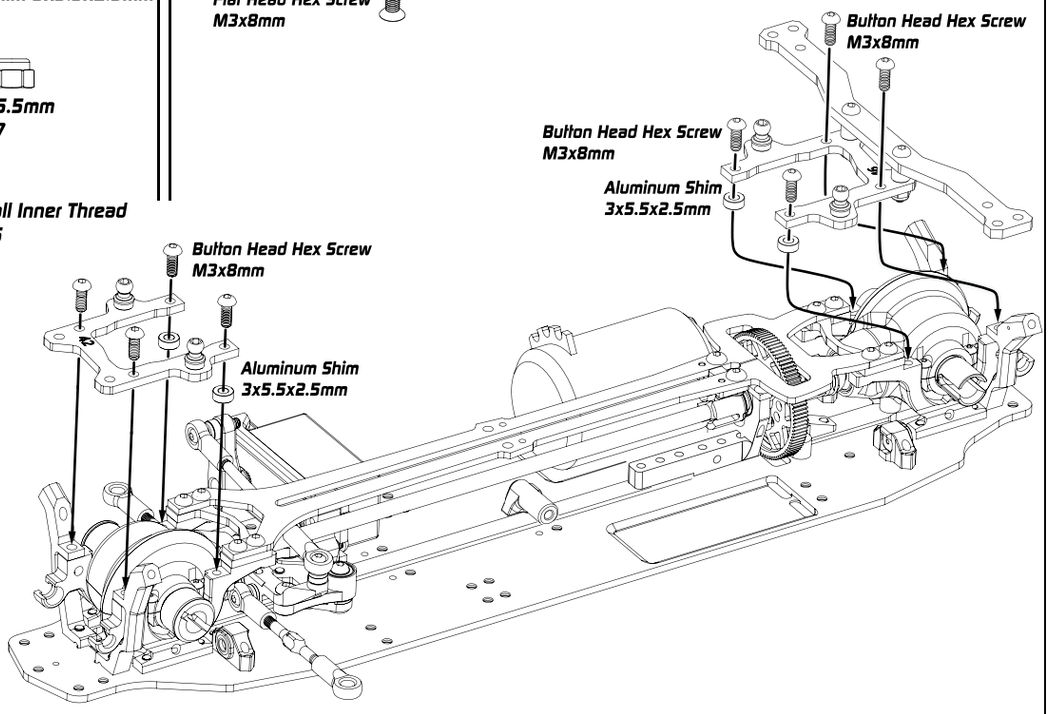

XPRESS
www.rc-xpress.com

10. Front Arm Assembly

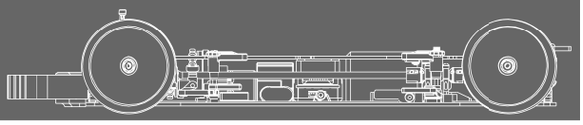

Bag K , L / HW Bag

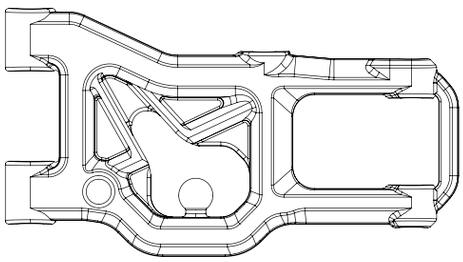

Strong Front And Rear Composite Suspension Arms V2
XP-10922 Option: XP-10923

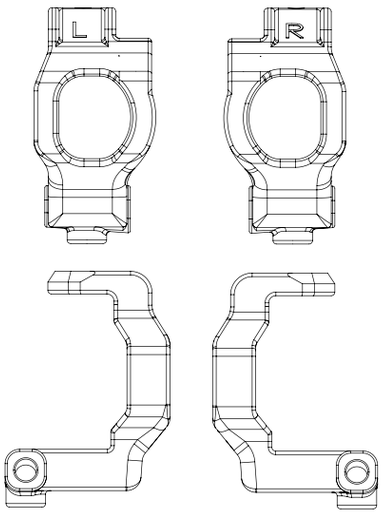

Strong Composite V2 C Hub 4 Degree
XP-10400 Option: XP-10810

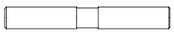

3.0mm Outer Suspension pin w/ Groove
XP-10602

Set Screw 4x10mm
XP-40056

Set Screw 3x8mm
XP-40054

Set Screw M3 x 3mm
XP-40052

Right

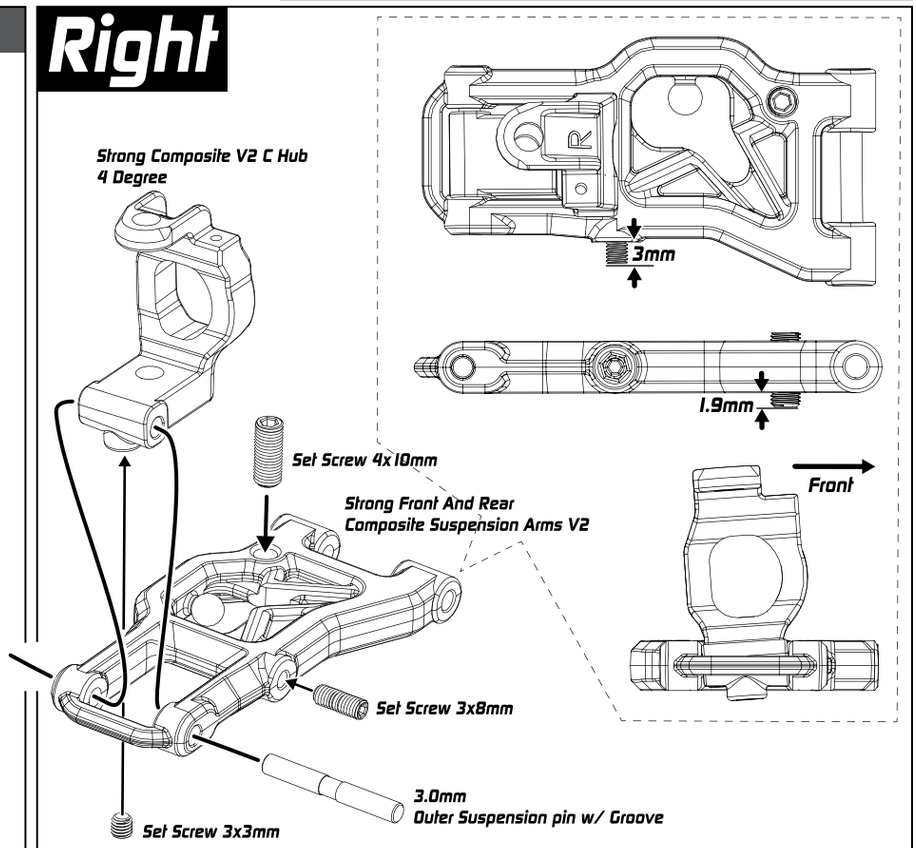

Left

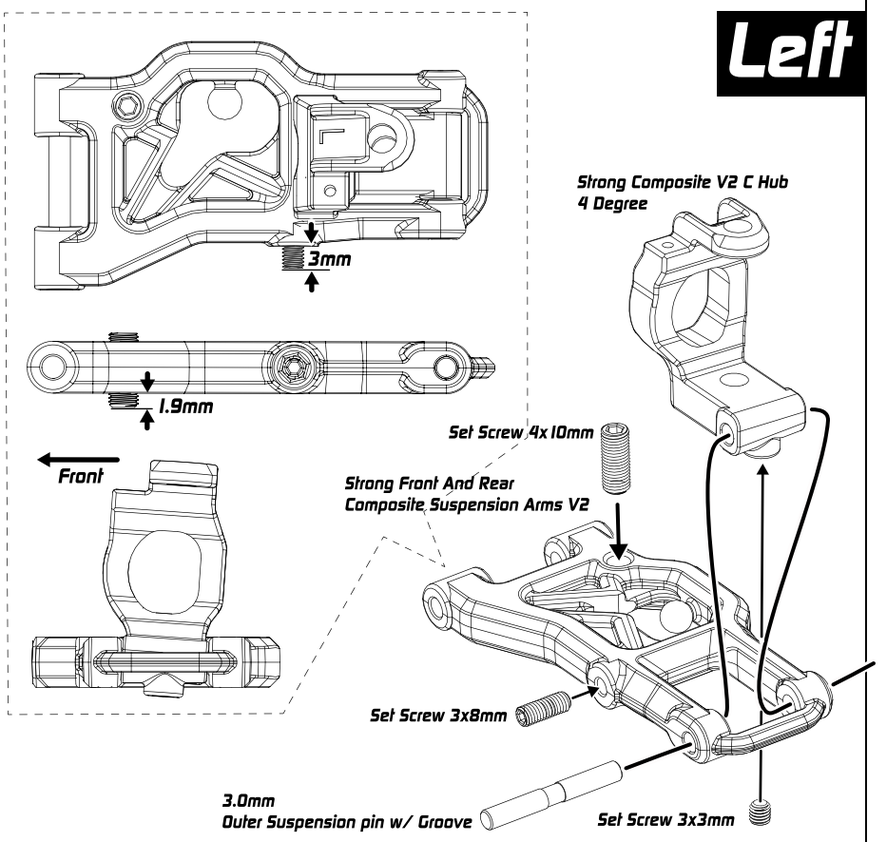

XPRESS
www.rc-xpress.com

11. Knuckle Assembly

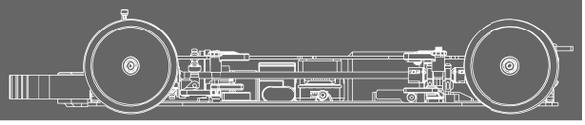

Bag M / Bearing Bag / HW Bag

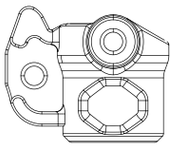

Composite Steering Block Right
XP-10109
Optional XP-10247

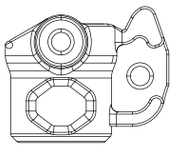

Composite Steering Block Left
XP-10109
Optional XP-10247

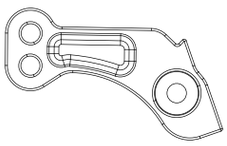

Composite Steering Block Plate Right
XP-10109
Optional XP-10247
, XP-10222

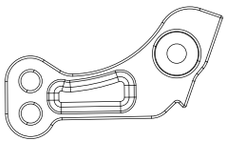

Composite Steering Block Plate Left
XP-10109
Optional XP-10247
, XP-10222

Ball Bearing 5 x 10 x 3mm
XP-40063

Ball Bearing 5 x 10 x 4mm
XP-40064

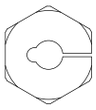

Alu Wheel Hub Red
XP-10129

Pin 2 x 9.8mm
XP-40069

Button Head Screw M3 x 8mm
XP-40038

Cap Head Screw M1.6 x 4mm
XP-40073

Hex Set Screw M3 x 2mm
XP-40051

Steel 2 x 12mm Flatspot Pin
for Universal
XP-40071

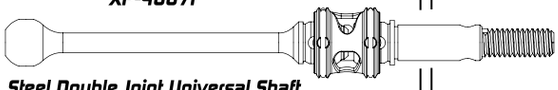

Steel Double Joint Universal Shaft
XP-10166

Steel Shim 5x7.0x0.2mm
XP-40086

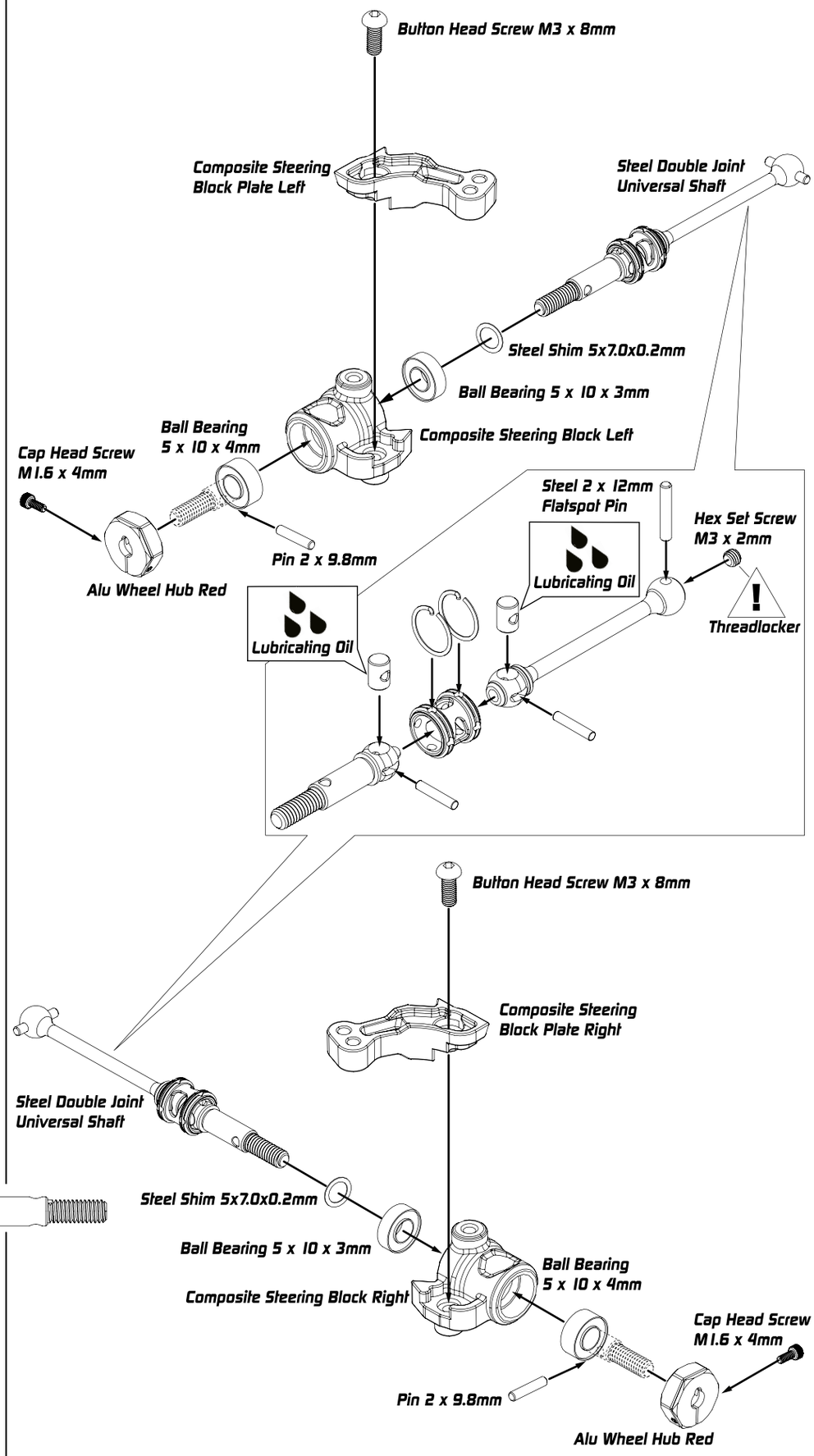

XPRESS
www.rc-xpress.com

12. Front Arm Assembly

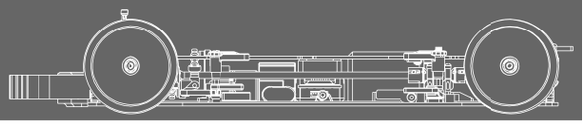

Bag K , L / HW Bag

Flanged King Pin Collar
XP-10401

King Pin
XP-10401

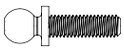

4.8mm Ball 10mm Thread
XP-10151

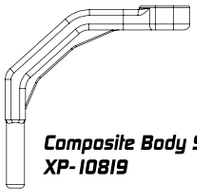

Composite Body Support Brace
XP-10819

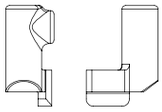

Composite Body Support Base - Left
XP-10819

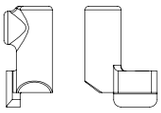

Composite Body Support Base - Right
XP-10819

Hex Screw Button Head M2 x 6mm
XP-40101

Set Screw M3 x 3mm
XP-40052

Aluminum Shim 3x5.5x1.0mm
XP-10240

Aluminum Shim 3x5.5x2.0mm
XP-10241

Right

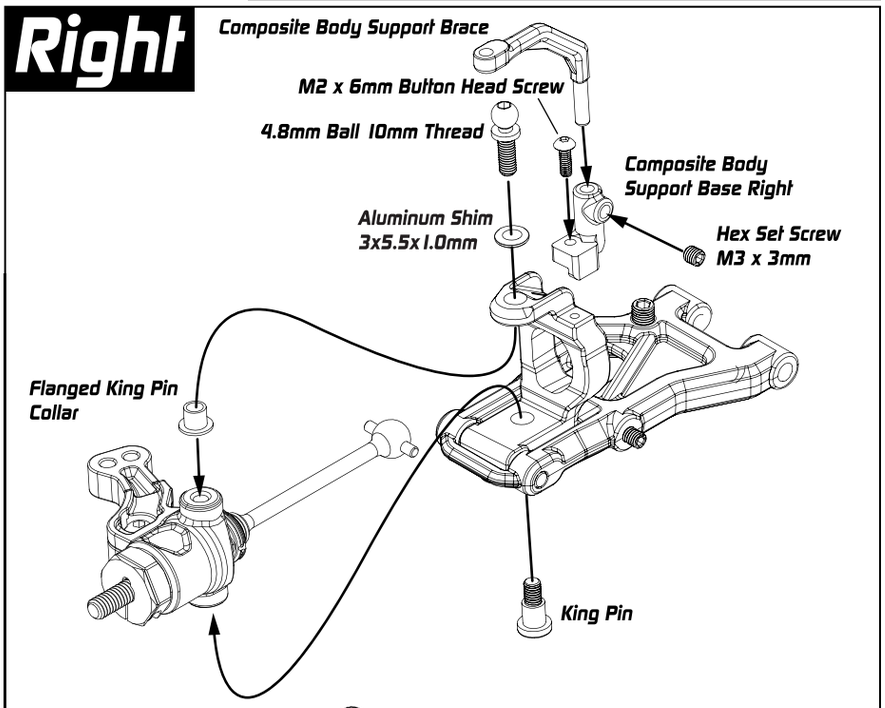

Left

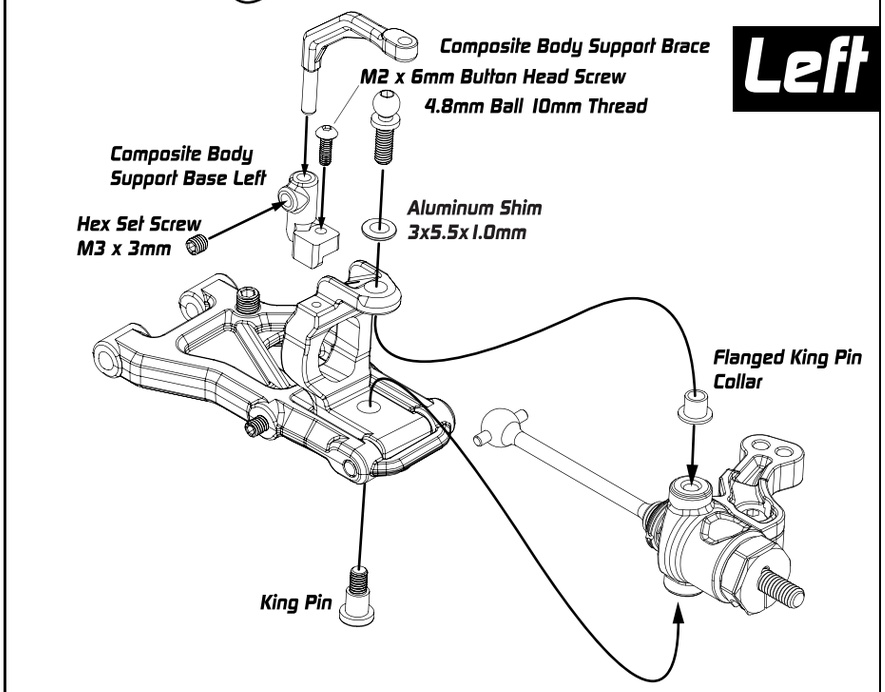

Left / Right

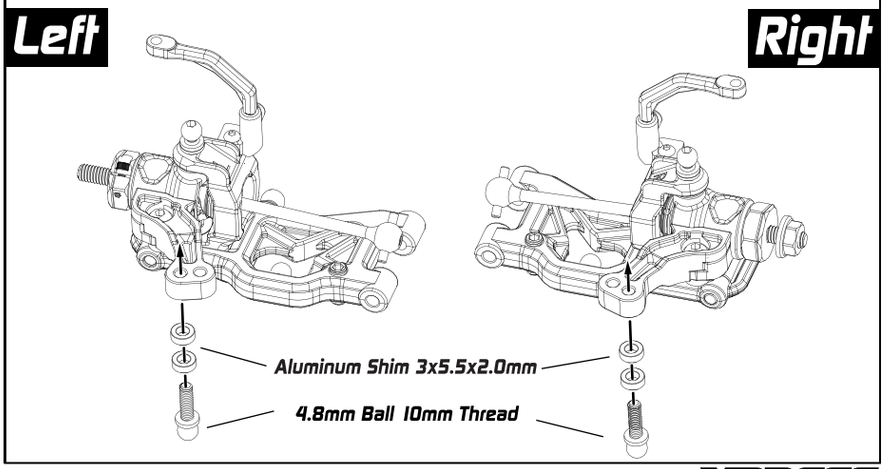

XPRESS
www.rc-xpress.com

13. Front Arm & Rear Upright

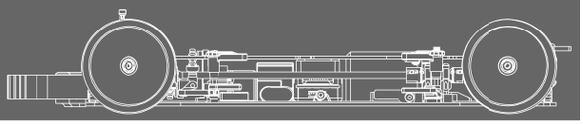

Bag L , N / Bearing Bag / HW Bag

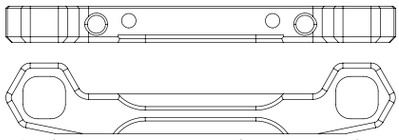

Aluminum FF Lower One Piece Suspension Mount
XP-10114

Aluminum Shim 3x5.5x1.0mm
XP-10240

3.0mm Suspension Pivot Pin
XP-10139

Flat Head Hex Screw M3x6mm
XP-40046

4.8mm Ball 6mm Thread
XP-10149

Hex Cap head Screw M1.6x4mm
XP-40073

Hex Set Screw M3 x 2mm
XP-40051

Steel Pin 2X9.8mm
XP-40069

Steel 2 x 12mm Flatspot Pin
for Universal
XP-40071

Driveshaft Protector Blade
XP-10128

Ball Bearing 5x10x4mm
XP-40064

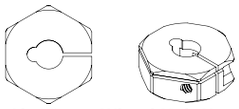

Aluminum Wheel Hub Hex 5mm
XP-10129

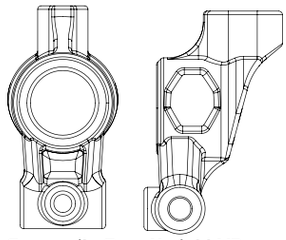

Composite Rear Upright V2
XP-10689
Option XP-10822

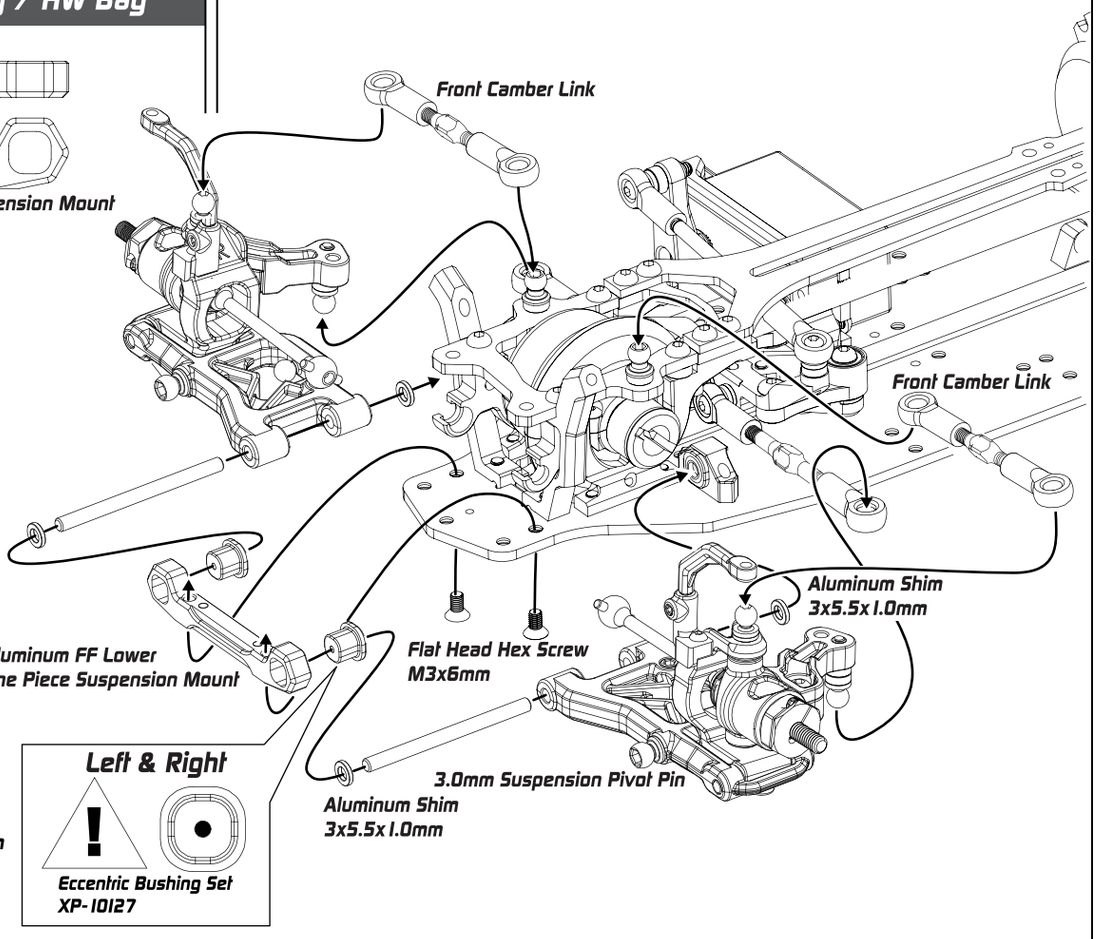

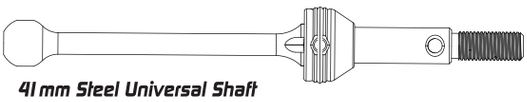

41mm Steel Universal Shaft
XP-10899

2x

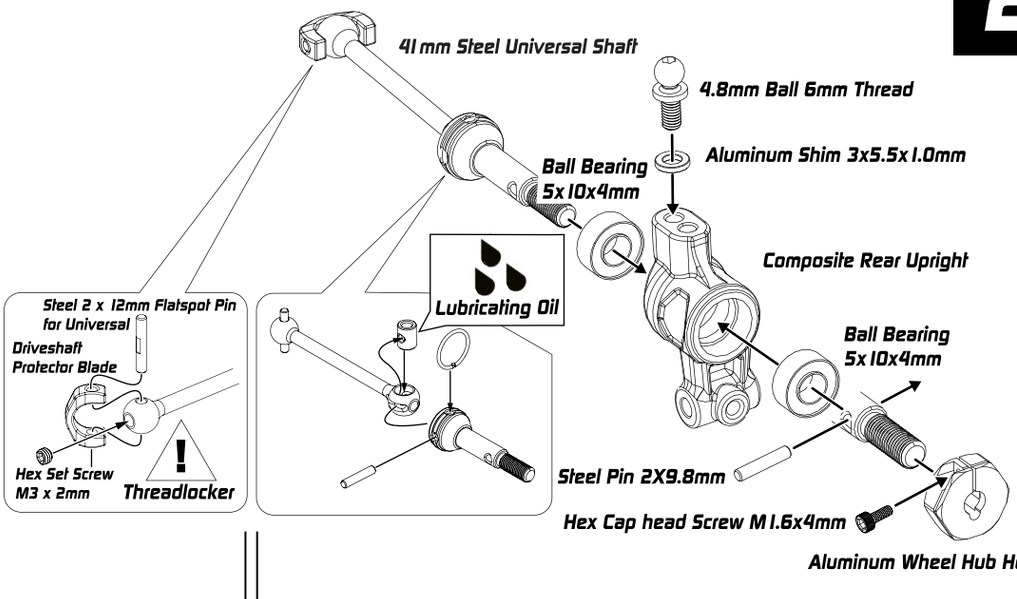

XPRESS
www.rc-xpress.com

Bag K , N / Bearing Bag / HW Bag

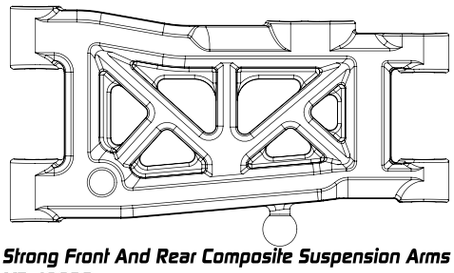

Strong Front And Rear Composite Suspension Arms
XP-10922
Option XP-10923

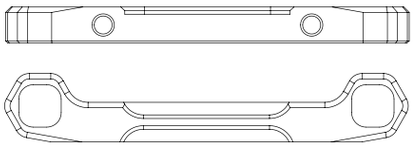

Aluminum RR Lower One Piece Suspension Mount
XP-10124

3x46.5mm Suspension Pivot Pin
XP-10874

3.0mm Outer Suspension pin w/ Groove
XP-10602

Set Screw M3 x 3mm
XP-40052

Set Screw M3x10mm
XP-40055

Set Screw M4x10mm
XP-40056

Flat Head Hex Screw M3x6mm
XP-40046

Aluminum Shim 3x5.5x1.0mm
XP-10240

Aluminum Shim 3x5.5x5.0mm
XP-40156

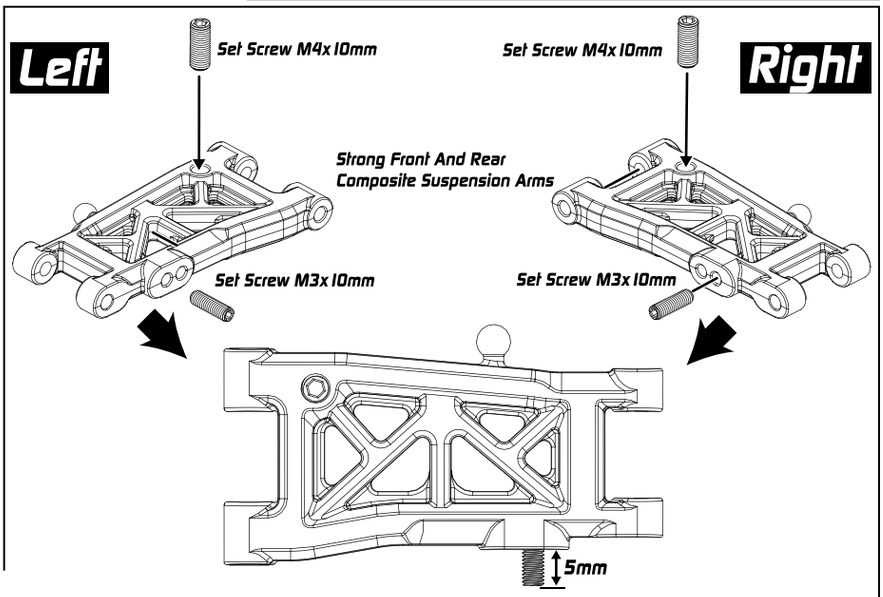

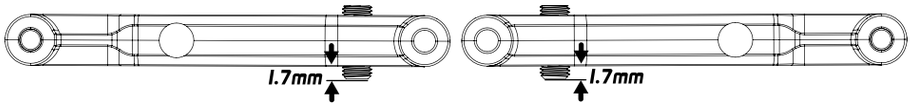

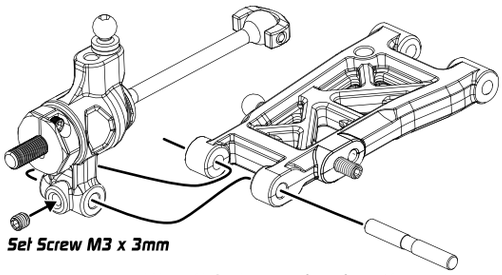

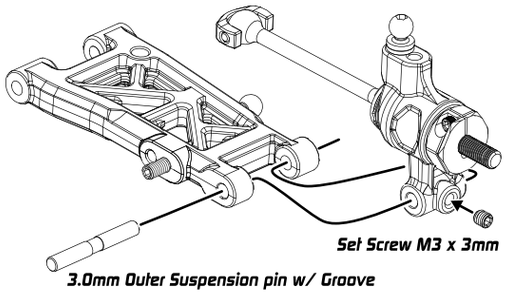

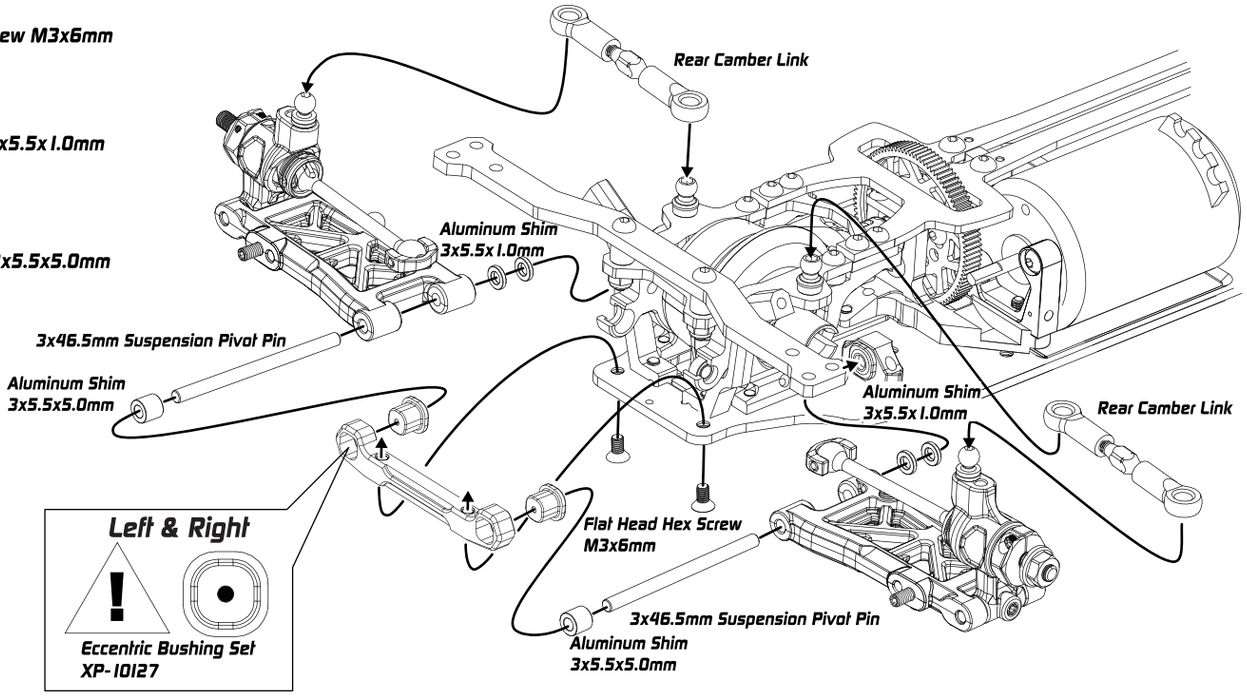

XPRESS
www.rc-xpress.com

15. Front & Rear Anti-Roll Bar

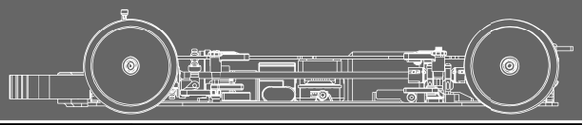

Bag 0 / Bearing Bag / HW Bag

Hex Set Screw M3x2mm
XP-40051

Hex Set Screw M3x3mm
XP-40052

Anti-Roll Bar Bushing
XP-10889

Ball Bearing 3x6x2.5mm
XP-40060

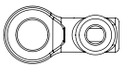

Composite Anti-Roll Bar Ball Joint
XP-10652

Aluminum Anti-Roll Bar Ball
XP-10818

Anti-Roll Bar Ball Joint Set
XP-10883

4x Anti-Roll Bar Link

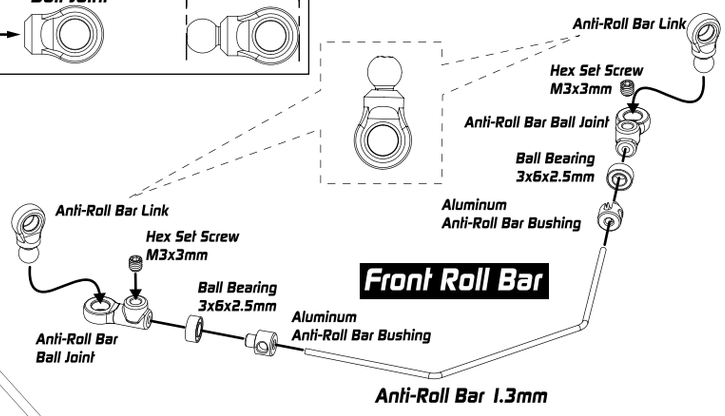

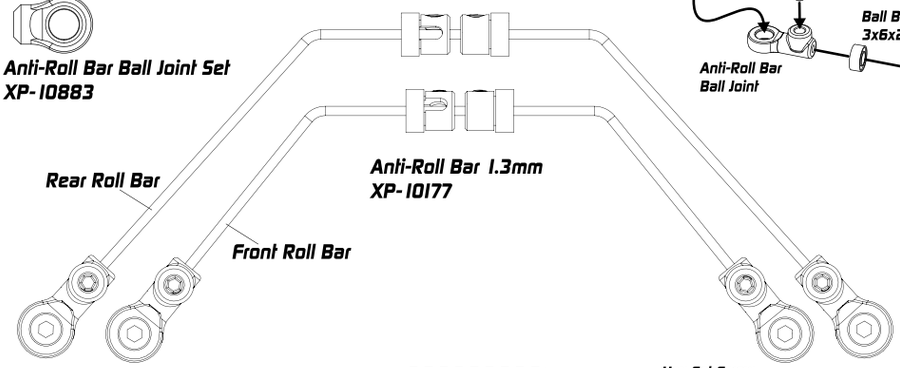

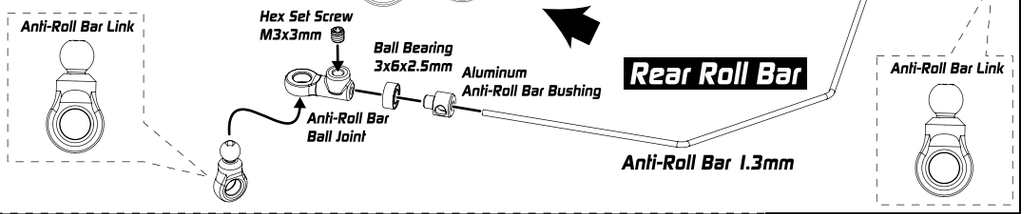

Front Roll Bar

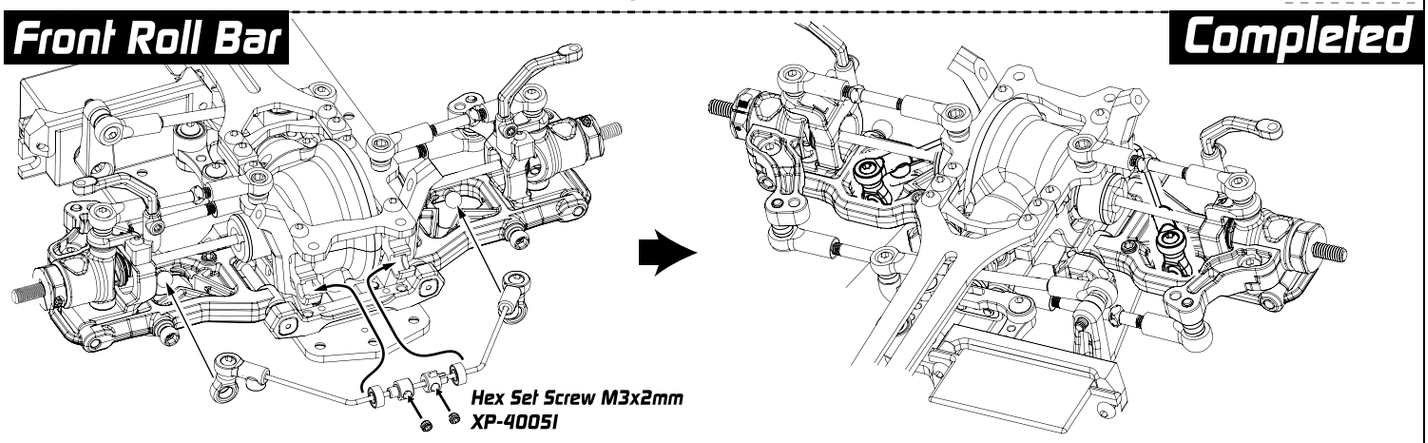

Rear Roll Bar

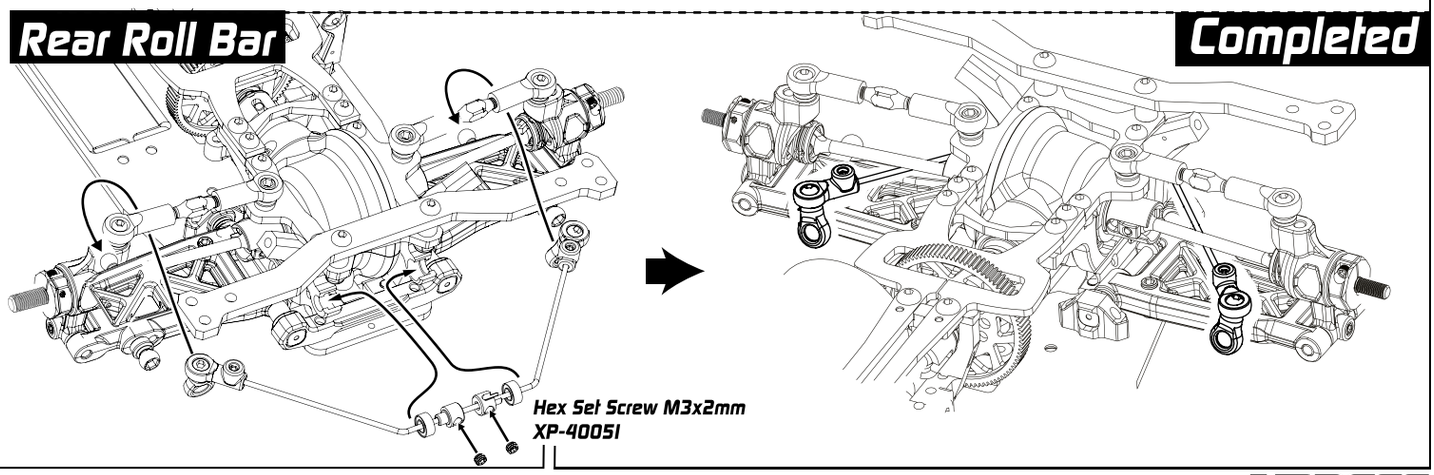

XPRESS
www.rc-xpress.com

16. Shocks Assembly

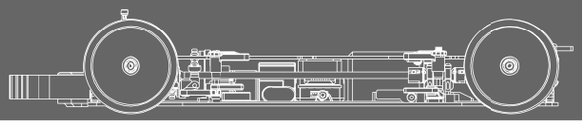

Bag P

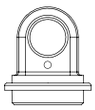
Long Travel Short Shock Grey Composite Shock Parts XP-10724

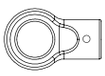
Long Travel Short Shock Grey Composite Shock Parts XP-10724

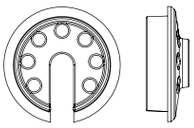
Shock Spring Retainer XP-10724

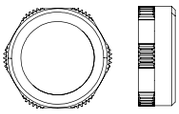
Alu Short Shock Cap XP-10578

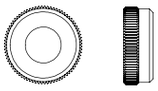
Alu Lower Short Shock Cap XP-10579

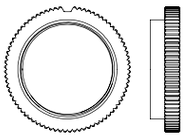
Alu Short Shock Adjustable Nut XP-10580

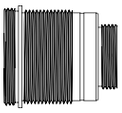
Long Travel Alu Short Shock Body XP-10725

4 Hole Piston XP-10159

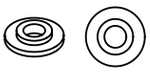
Shaft Cover XP-10159

5.5mm Pivot Ball XP-10121

E-Clip 2.5mm XP-40057

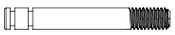
Short Shock Shaft XP-10582

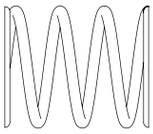
Stiff Shock Spring Pink XP-10170

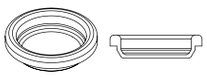
Shock Absorber Membrane XP-10147

Shock X-Ring XP-10601

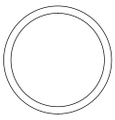
O Ring For Spring Adjust Nut XP-10607

4x

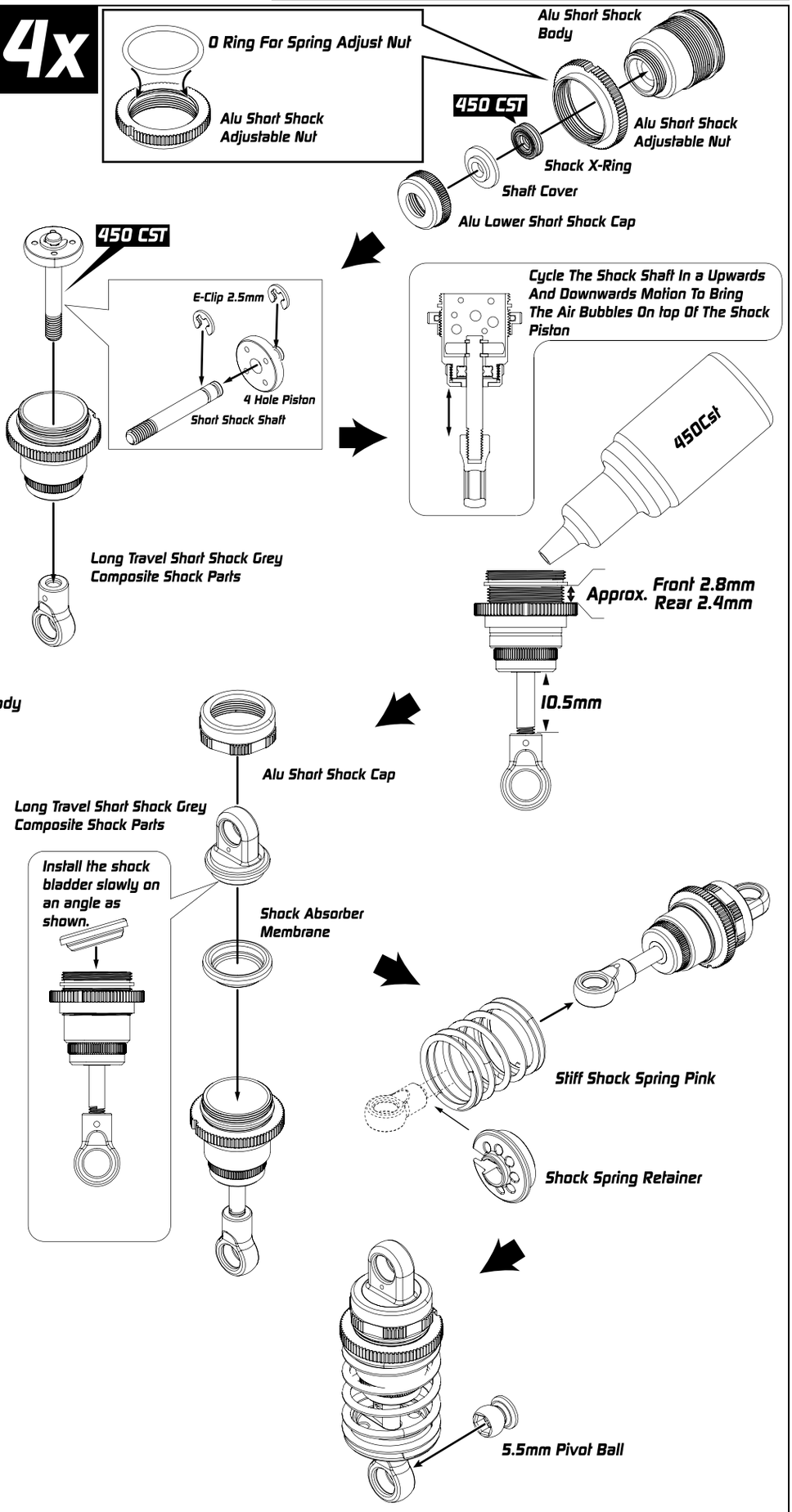

XPRESS
www.rc-xpress.com

17. Shocks, Bumper & Body Post

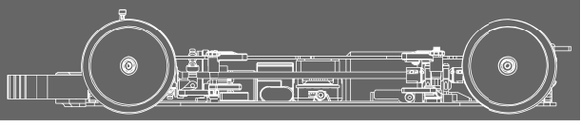

Bag Q / HW Bag

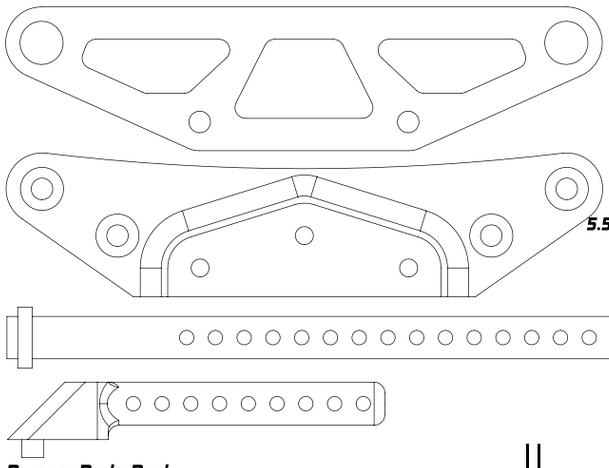

Bumper Body Post
XP-10863

Flat Head Hex Screw M3x8mm
XP-40048

Aluminum Shim 3x5.5x2.0mm
XP-10241

Aluminum Shim 3x5.5x2.5mm
XP-40158

5.5mm Ball 8mm Thread
XP-10895

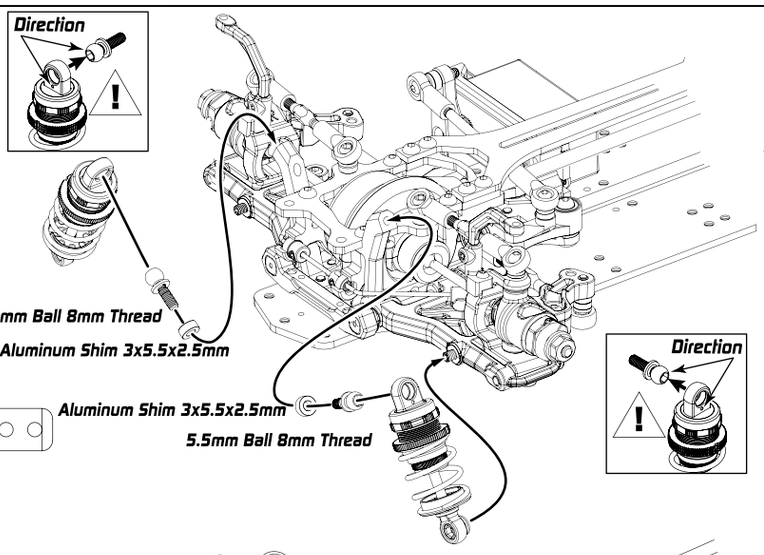

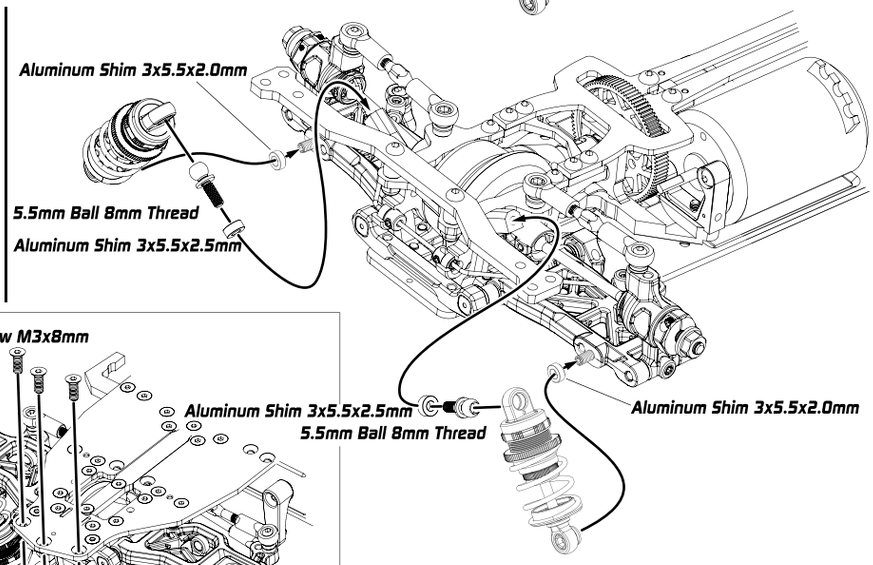

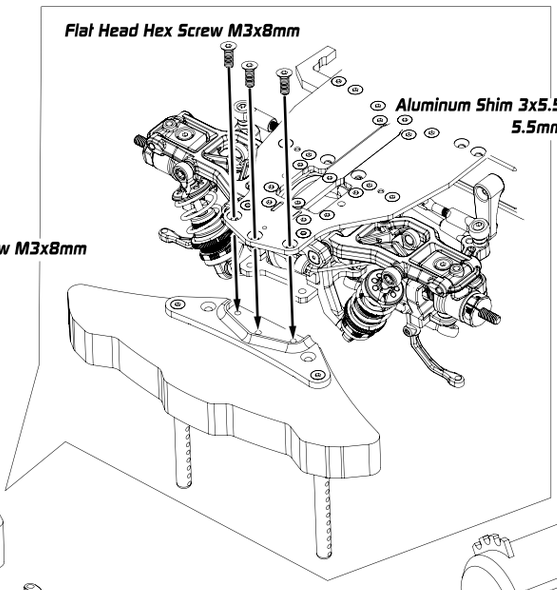

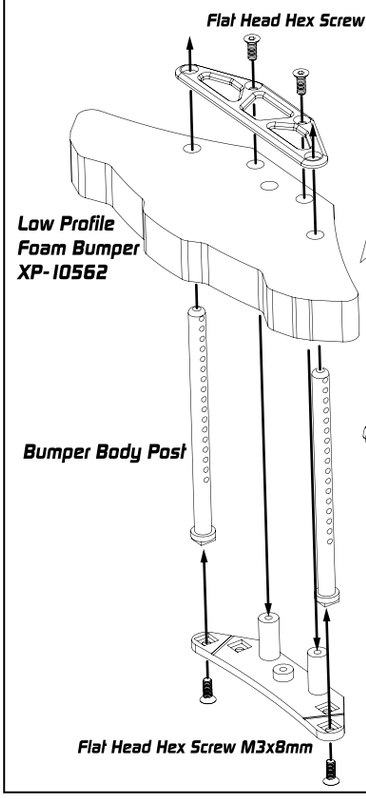

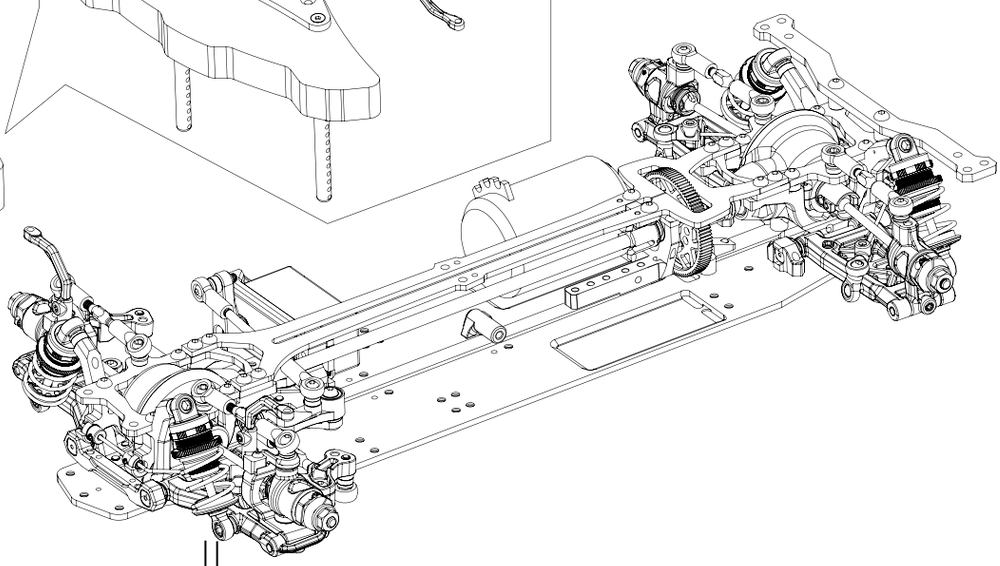

XPRESS
www.rc-xpress.com

18. Battery Holder & Fan Mount

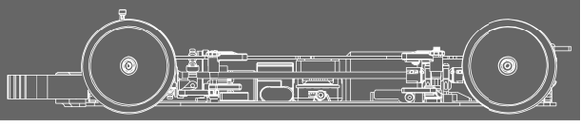

Bag G , R / HW Bag

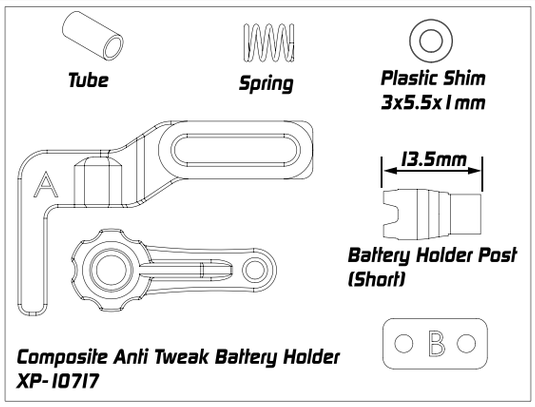

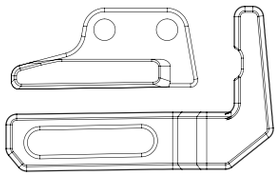

Plastic Battery Stopper Plate
XP-10848
Optional: XP-10877

Plastic Battery Stopper Plate
XP-10848
Optional : XP-10868

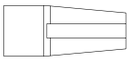

Antenna Holder
XP-10863

Set Screw 3x4mm
XP-40053

Button Head Hex Screw M3x8mm
XP-40038

Button Head Hex Screw M3x12mm
XP-40040

Button Head Hex Screw M3x15mm
XP-40157

Flat Head Hex Screw 3x6mm
XP-40046

Flat Head Hex Screw M3x10mm
XP-40049

Flat Head Hex Screw M3x16mm
XP-40193

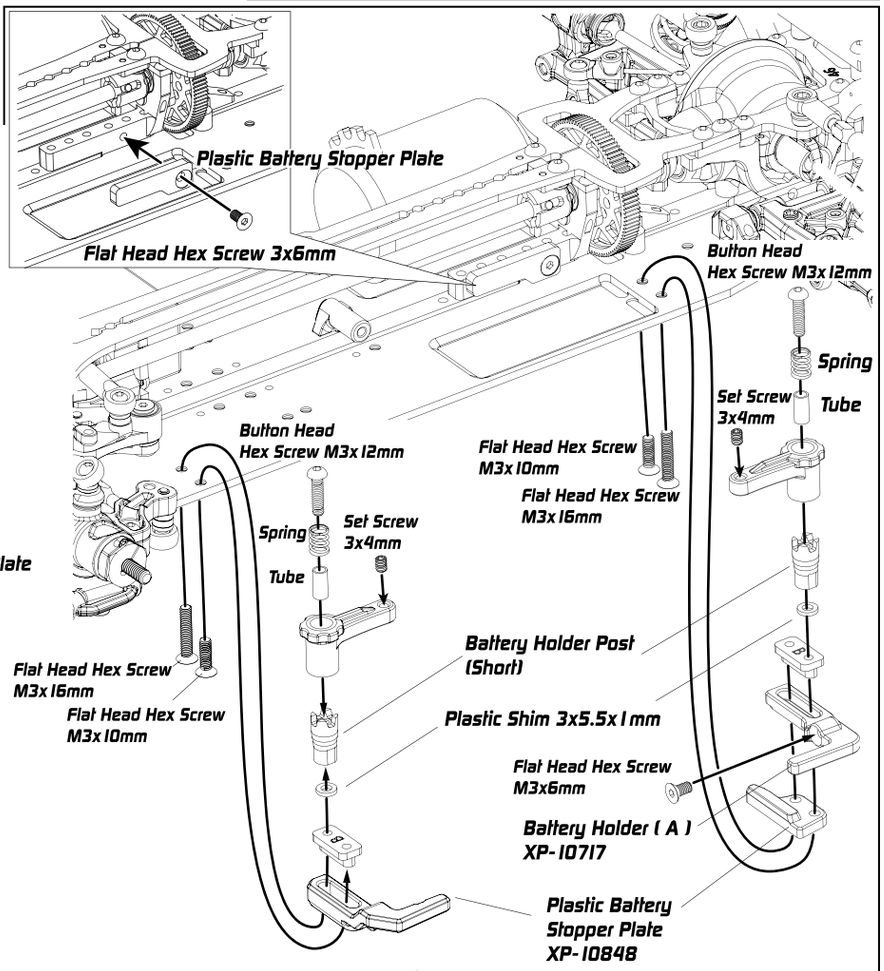

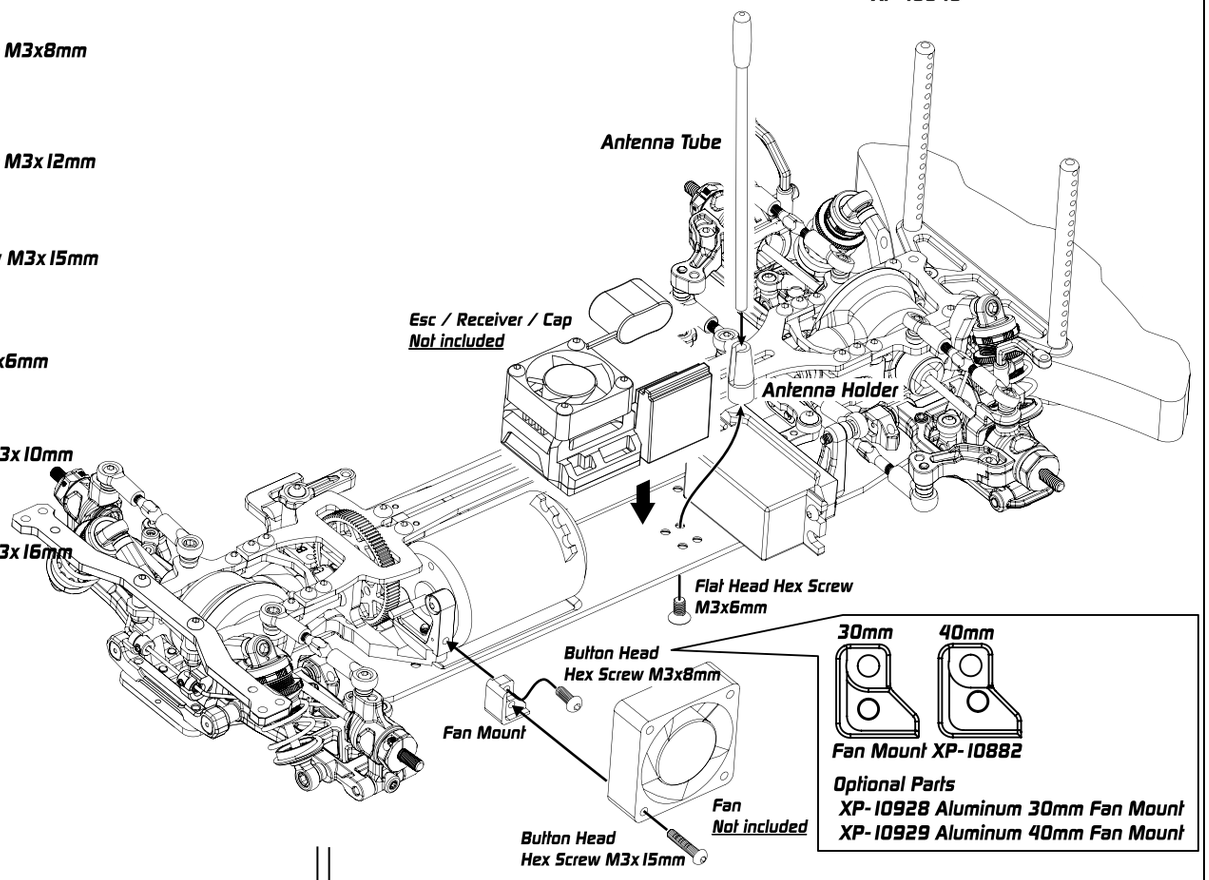

XPRESS
www.rc-xpress.com

19. Wheel & Body Clips

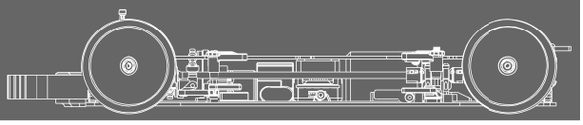

HW Bag

Button Head Hex Screw M3x8mm
XP-40038

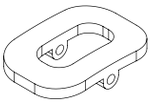

Body Height Support
XP-10863

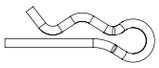

Body Clips
XP-10055

Lock Nut 7mm
XP-40068

Lock Nut 7mm
XP-40068

Wheel/Tires
Not Included

Lock Nut 7mm
XP-40068

Wheel/Tires
Not Included

Personal Transponder
Not Included

Lock Nut 7mm
XP-40068

Wheel/Tires
Not Included

Battery
Not Included

Lock Nut 7mm
XP-40068

Body Clips

Body Height Support

Vertical Rear Body Post

Body Clips

Body Height Support

Body Clips

Button Head Hex Screw
M3x8mm

OR

Horizontal Rear Body Post

Button Head Hex Screw
M3x8mm

Body Clips

Body Clips

Body Height Support

Button Head Hex Screw
M3x8mm

XPRESS
www.rc-xpress.com

Gear Ratio Chart

Pinon (64P)

Spur Gear (64P)

2.353	25	26	27	28	29	30	31	32	33	34	35	36	37	38	39	40	41	42	43	44	45	46	47	48	49	50
80													5.09	4.95	4.83	4.71	4.59	4.48	4.38	4.28	4.18	4.09	4.01	3.92	3.84	3.76
81												5.29	5.15	5.02	4.89	4.76	4.65	4.54	4.43	4.33	4.24	4.14	4.06	3.97	3.89	3.81
82											5.51	5.36	5.21	5.08	4.95	4.82	4.71	4.59	4.49	4.39	4.29	4.19	4.11	4.02	3.94	3.86
83										5.74	5.58	5.42	5.28	5.14	5.01	4.88	4.76	4.65	4.54	4.44	4.34	4.25	4.16	4.07	3.99	3.91
84									5.99	5.81	5.65	5.49	5.34	5.20	5.07	4.94	4.82	4.71	4.60	4.49	4.39	4.30	4.21	4.12	4.03	3.95
85								6.25	6.06	5.88	5.71	5.56	5.41	5.26	5.13	5.00	4.88	4.76	4.65	4.55	4.44	4.35	4.26	4.17	4.08	4.00
86							6.53	6.32	6.13	5.95	5.78	5.62	5.47	5.33	5.19	5.06	4.94	4.82	4.71	4.60	4.50	4.40	4.31	4.22	4.13	4.05
87						6.82	6.60	6.40	6.20	6.02	5.85	5.69	5.53	5.39	5.25	5.12	4.99	4.87	4.76	4.65	4.55	4.45	4.36	4.26	4.18	4.09
88					7.14	6.90	6.68	6.47	6.27	6.09	5.92	5.75	5.60	5.45	5.31	5.18	5.05	4.93	4.82	4.71	4.60	4.50	4.41	4.31	4.23	4.14
89				7.48	7.22	6.98	6.76	6.54	6.35	6.16	5.98	5.82	5.66	5.51	5.37	5.24	5.11	4.99	4.87	4.76	4.65	4.55	4.46	4.36	4.27	4.19
90			7.84	7.56	7.30	7.06	6.83	6.62	6.42	6.23	6.05	5.88	5.72	5.57	5.43	5.29	5.17	5.04	4.92	4.81	4.71	4.60	4.51	4.41	4.32	4.24
91		8.24	7.93	7.65	7.38	7.14	6.91	6.69	6.49	6.30	6.12	5.95	5.79	5.63	5.49	5.35	5.22	5.10	4.98	4.87	4.76	4.65	4.56	4.46	4.37	4.28
92	8.66	8.33	8.02	7.73	7.46	7.22	6.98	6.76	6.56	6.37	6.19	6.01	5.85	5.70	5.55	5.41	5.28	5.15	5.03	4.92	4.81	4.71	4.61	4.51	4.42	4.33
93	8.75	8.42	8.10	7.82	7.55	7.29	7.06	6.84	6.63	6.44	6.25	6.08	5.91	5.76	5.61	5.47	5.34	5.21	5.09	4.97	4.86	4.76	4.66	4.56	4.47	4.38
94	8.85	8.51	8.19	7.90	7.63	7.37	7.13	6.91	6.70	6.51	6.32	6.14	5.98	5.82	5.67	5.53	5.39	5.27	5.14	5.03	4.92	4.81	4.71	4.61	4.51	4.42
95	8.94	8.60	8.28	7.98	7.71	7.45	7.21	6.99	6.77	6.57	6.39	6.21	6.04	5.88	5.73	5.59	5.45	5.32	5.20	5.08	4.97	4.86	4.76	4.66	4.56	4.47
96	9.04	8.69	8.37	8.07	7.79	7.53	7.29	7.06	6.85	6.64	6.45	6.27	6.11	5.94	5.79	5.65	5.51	5.38	5.25	5.13	5.02	4.91	4.81	4.71	4.61	4.52
97	9.13	8.78	8.45	8.15	7.87	7.61	7.36	7.13	6.92	6.71	6.52	6.34	6.17	6.01	5.85	5.71	5.57	5.43	5.31	5.19	5.07	4.96	4.86	4.76	4.66	4.56
98	9.22	8.87	8.54	8.24	7.95	7.69	7.44	7.21	6.99	6.78	6.59	6.41	6.23	6.07	5.91	5.76	5.62	5.49	5.36	5.24	5.12	5.01	4.91	4.80	4.71	4.61
99	9.32	8.96	8.63	8.32	8.03	7.76	7.51	7.28	7.06	6.85	6.66	6.47	6.30	6.13	5.97	5.82	5.68	5.55	5.42	5.29	5.18	5.06	4.96	4.85	4.75	4.66
100	9.41	9.05	8.71	8.40	8.11	7.84	7.59	7.35	7.13	6.92	6.72	6.54	6.36	6.19	6.03	5.88	5.74	5.60	5.47	5.35	5.23	5.12	5.01	4.90	4.80	
101	9.51	9.14	8.80	8.49	8.19	7.92	7.67	7.43	7.20	6.99	6.79	6.60	6.42	6.25	6.09	5.94	5.80	5.66	5.53	5.40	5.28	5.17	5.06	4.95		
102	9.60	9.23	8.89	8.57	8.28	8.00	7.74	7.50	7.27	7.06	6.86	6.67	6.49	6.32	6.15	6.00	5.85	5.71	5.58	5.45	5.33	5.22	5.11			

Pinon (48P)

Spur Gear (48P)

2.353	15	16	17	18	19	20	21	22	23	24	25	26	27	28	29	30	31	32	33	34	35	36	37	38	39	40
52																						2.66	2.60	2.55	2.50	2.45
53																					2.77	2.71	2.65	2.60	2.55	2.49
54																				2.89	2.82	2.76	2.70	2.65	2.59	2.54
55																			3.01	2.94	2.88	2.81	2.75	2.70	2.64	2.59
56																		3.14	3.06	2.99	2.93	2.86	2.80	2.75	2.69	2.64
57																	3.27	3.19	3.12	3.05	2.98	2.92	2.85	2.79	2.74	2.68
58																3.41	3.33	3.25	3.17	3.10	3.03	2.97	2.90	2.84	2.79	2.73
59															3.56	3.47	3.39	3.31	3.23	3.16	3.09	3.02	2.95	2.89	2.83	2.78
60														3.72	3.62	3.53	3.44	3.36	3.28	3.21	3.14	3.07	3.00	2.94	2.88	2.82
61													3.88	3.78	3.68	3.59	3.50	3.42	3.34	3.26	3.19	3.12	3.05	2.99	2.93	2.87
62												4.05	3.94	3.84	3.74	3.65	3.56	3.47	3.39	3.32	3.24	3.17	3.10	3.04	2.98	2.92
63											4.24	4.12	4.01	3.90	3.80	3.71	3.62	3.53	3.45	3.37	3.29	3.22	3.15	3.09	3.03	2.96
64										4.43	4.30	4.18	4.07	3.96	3.86	3.76	3.67	3.59	3.50	3.42	3.35	3.27	3.20	3.14	3.07	3.01
65									4.63	4.50	4.37	4.25	4.13	4.02	3.92	3.82	3.73	3.64	3.56	3.48	3.40	3.32	3.25	3.19	3.12	3.06
66								4.85	4.71	4.57	4.44	4.31	4.20	4.09	3.98	3.88	3.79	3.70	3.61	3.53	3.45	3.38	3.30	3.24	3.17	3.11
67							5.09	4.93	4.78	4.64	4.50	4.38	4.26	4.15	4.04	3.94	3.85	3.75	3.67	3.58	3.50	3.43	3.35	3.28	3.22	3.15
68						5.33	5.16	5.00	4.85	4.71	4.57	4.44	4.32	4.21	4.10	4.00	3.90	3.81	3.72	3.64	3.56	3.48	3.40	3.33	3.27	3.20
69					5.60	5.41	5.24	5.07	4.92	4.78	4.64	4.51	4.39	4.27	4.16	4.06	3.96	3.87	3.78	3.69	3.61	3.53	3.45	3.38	3.31	3.25
70				5.88	5.68	5.49	5.31	5.15	4.99	4.84	4.71	4.58	4.45	4.33	4.22	4.12	4.02	3.92	3.83	3.74	3.66	3.58	3.50	3.43	3.36	3.29
71			6.19	5.97	5.76	5.57	5.39	5.22	5.06	4.91	4.77	4.64	4.52	4.40	4.28	4.18	4.07	3.98	3.89	3.80	3.71	3.63	3.55	3.48	3.41	3.34
72		6.52	6.27	6.05	5.84	5.65	5.47	5.29	5.13	4.98	4.84	4.71	4.58	4.46	4.34	4.24	4.13	4.03	3.94	3.85	3.76	3.68	3.60	3.53	3.46	3.39
73	6.87	6.61	6.36	6.13	5.92	5.73	5.54	5.37	5.21	5.05	4.91	4.77	4.64	4.52	4.40	4.29	4.19	4.09	3.99	3.90	3.82	3.73	3.65	3.58	3.51	
74	6.96	6.70	6.45	6.22	6.00	5.80	5.62	5.44	5.28	5.12	4.97	4.84	4.71	4.58	4.46	4.35	4.25	4.15	4.05	3.96	3.87	3.79	3.70	3.63		

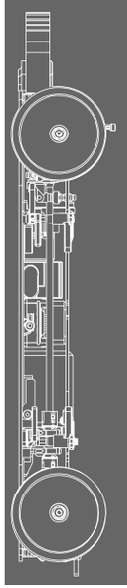

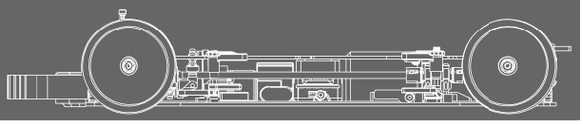

XP-10950 - Aluminum Flex Control Mount

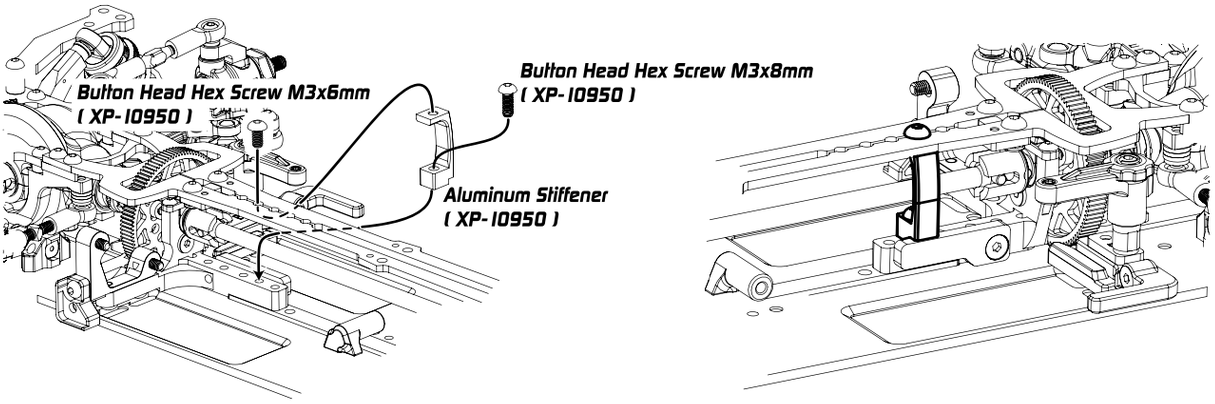

XP-10641 - On-power Control System

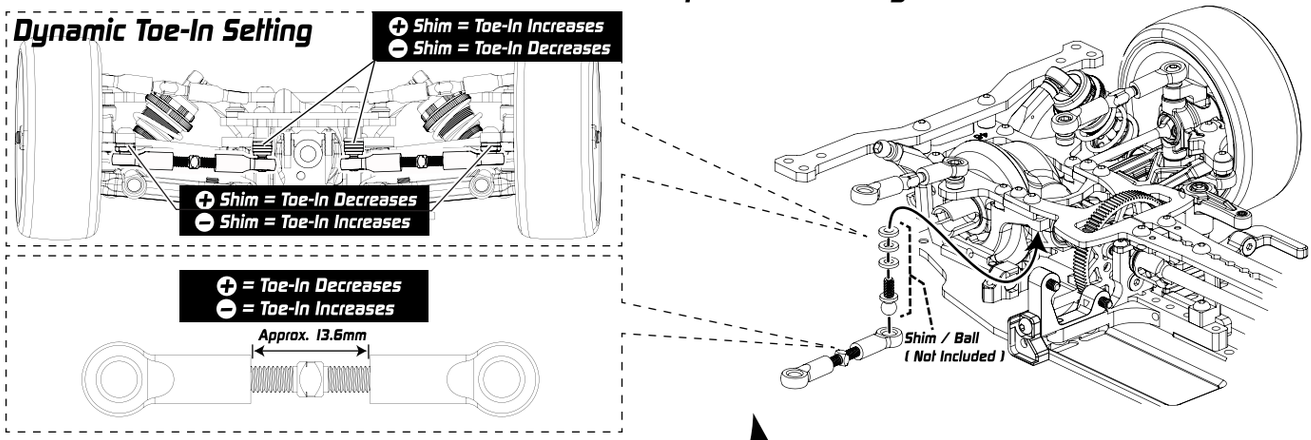

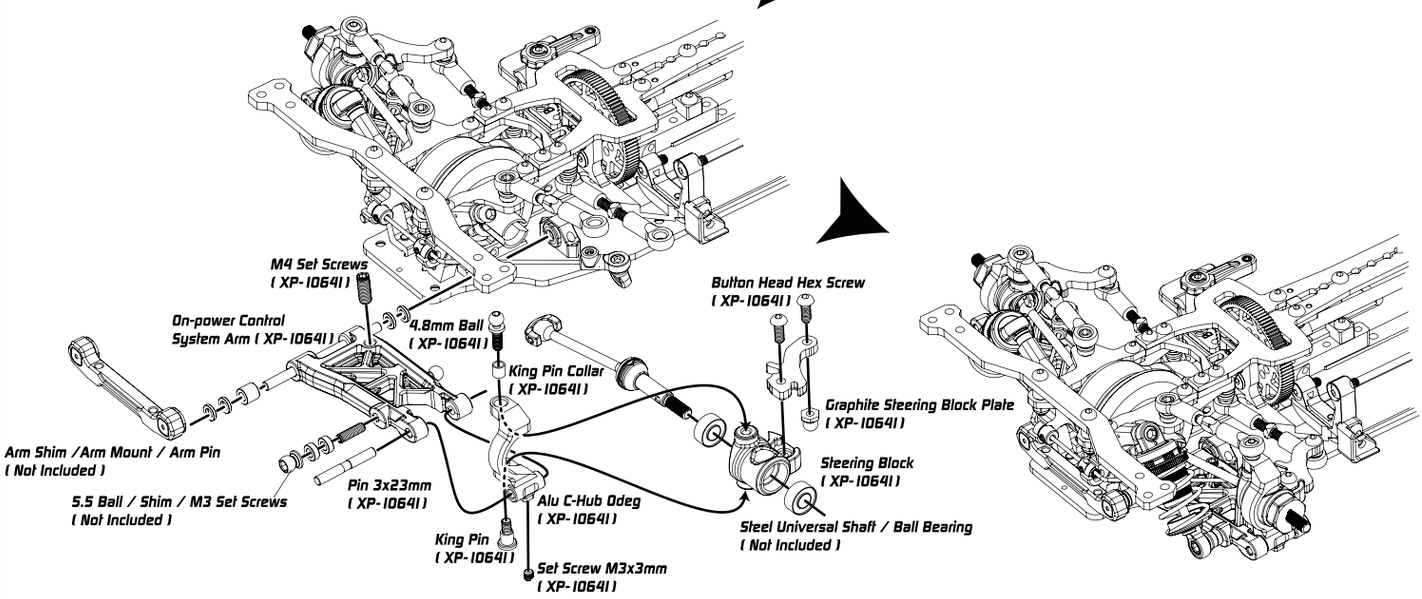

Latest Parts & Hop-Ups Information

www.rc-xpress.com/arrow-at1-parts

XPRESS ARROW AT1

Latest Setups
www.rc-xpress.com/manuals-setups-download

Set-Up Sheet

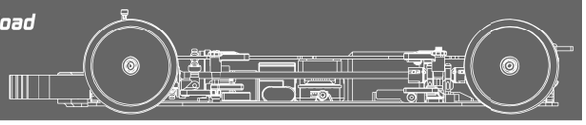

Driver _____ Track Surface _____ Track Temperature _____

Date _____ Track Traction _____ Result _____ Air Temperature _____

Track _____ Country _____ Best Lap _____ Humidity _____ Remark _____

Front

N = Normal
H = Hard

Suspension Arm ■ N ☐ H
C-Hub ■ N ☐ H
Steering Block ■ N ☐ H

Shim 1 mm
Shim 2.5 mm
Shim 2 mm

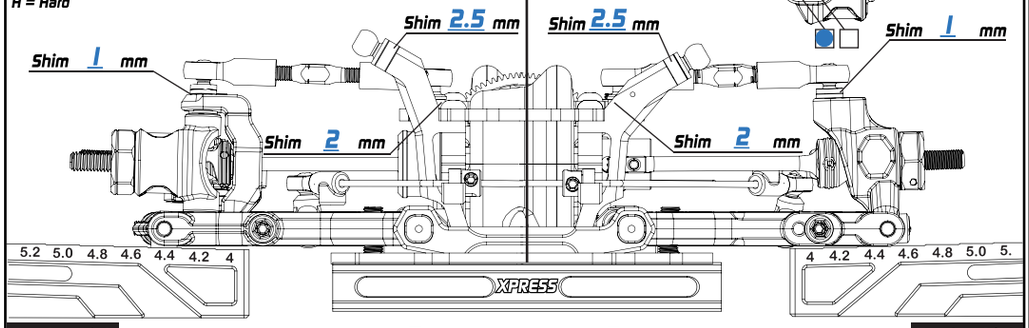

Rear

Steering Block ■ N ☐ H
N = Normal
H = Hard

Shim 2.5 mm
Shim 1 mm
Shim 2 mm

Optional

On-Power Control System

Shim ___ mm
Shim ___ mm
Shim ___ mm
Shim ___ mm

Hex Offset ___ mm
Camber ___ °
Ride Height ___ mm
DownStop ___ mm
Sway Bar ___ mm

Steering Block ☐ M ☐ H
Suspension Arm ☐ M ☐ H

Camber Link

Item No:
XP: ___

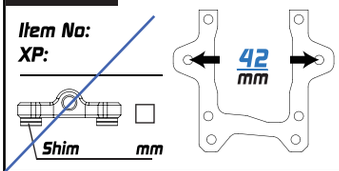

Shim ___ mm

5 mm	Hex Offset	5 mm	
1 °	Camber	1 °	
5 mm	Ride Height	5.5 mm	
6 mm	DownStop	5 mm	
1.3 mm	Sway Bar	1.3 mm	

Camber Link

Item No:
XP: ___

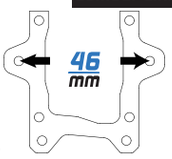

Shim ___ mm

Front Toe Out 1 °
Front Tire Additive Area
Lower Arm Shim 0 mm
Bump Steering Shim 4 mm
1
2
Wheelbase Shim
FF 1 mm
FR 1 mm

Shim 0 mm
Inserts 8 mm
Shim 1 mm

Rear Toe In 3 °
Rear Tire Additive Area
Lower Arm Shim 2 mm
Wheelbase Shim
RF 2 mm
RR 5 mm

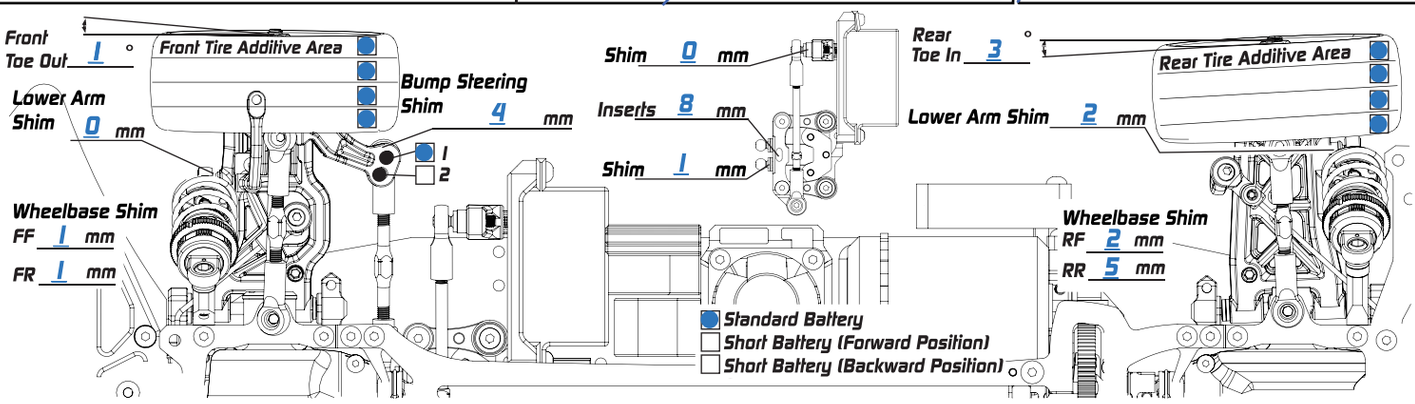

■ Standard Battery
☐ Short Battery (Forward Position)
☐ Short Battery (Backward Position)

Suspension Mount Setup

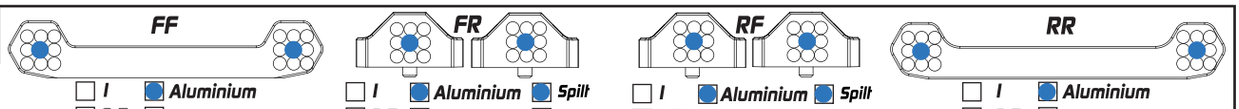

FF	FR	RF	RR
☐ 1 ■ Aluminium	☐ 1 ■ Aluminium ■ Spilt	☐ 1 ■ Aluminium ■ Spilt	☐ 1 ■ Aluminium
☐ 0.5 ☐ Brass	☐ 0.5 ☐ Brass ☐ Solid	☐ 0.5 ☐ Brass ☐ Solid	☐ 0.5 ☐ Brass
Mount Spacer 0 mm	Mount Spacer 0 mm	Mount Spacer 0 mm	Mount Spacer 0 mm

Flex Control

Upper Deck Thick 2 mm

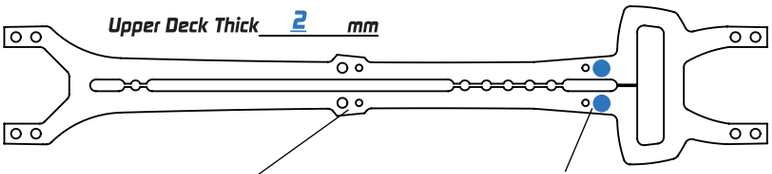

■ Graphite Chassis
☐ Aluminum Chassis
☐ Upper Deck Stiffener (Plastic) ■
☐ Upper Deck Stiffener (Aluminum) ☐

Damper Setup

Foam Insert ☐
Hole In Cap ☐

Front		Rear
Xpress XP-10170 Pink	Spring	Xpress XP-10170 Pink
450cst	Oil	450cst
50%	Rebound	50%
4	Piston	4
10.5mm	Length	10.5mm

Foam Insert ☐
Hole In Cap ☐

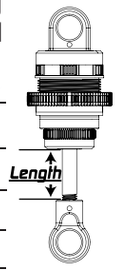

Transmission Setup

Front		Rear
Spool	Diff.	Gear Diff
/ g	Oil	5000cst / 1.1 g

Bevel Gear _____

Spur 64 P/ 94 T Pinon ___ P/ ___ T

Final Drive Ratio _____ : 1

Formula

$$\text{Final Drive Ratio} = \left(\frac{\text{Spur}}{\text{Pinon}} \times \frac{\text{Internal Ratio}}{2.353}\right) : 1$$

Others

Servo _____ Tires _____

Esc _____

Motor _____

Additive _____

Body _____

Rear Wing _____

Remark

Default Set-up

XPRESS ARROW AT1

Latest Setups
www.rc-xpress.com/manuals-setups-download

Set-Up Sheet

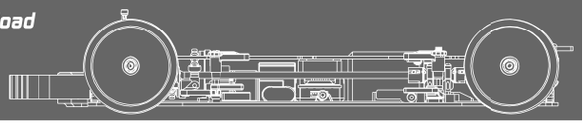

Driver: Midnight Boss | Track Surface: Asphalt | Track Temperature: ____

Date: 2022 May 09 | Track Traction: Medium | Result: ____ | Air Temperature: 29 °C

Track: Tom Racing Circuit | Country: Hong Kong | Best Lap: ____ | Humidity: ____ | Remark: ____

Front

N = Normal
H = Hard

Suspension Arm: ☐ N ☒ H
C-Hub: ☐ N ☒ H
Steering Block: ☐ N ☒ H

Shim 1 mm
Shim 4 mm
Shim 2 mm

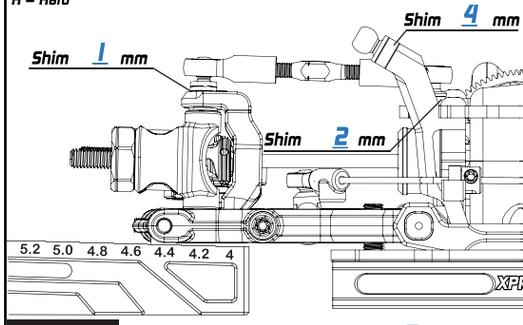

Rear

Steering Block: ☐ N ☒ H
N = Normal
H = Hard

Shim 5 mm
Shim 2 mm
Shim 1 mm

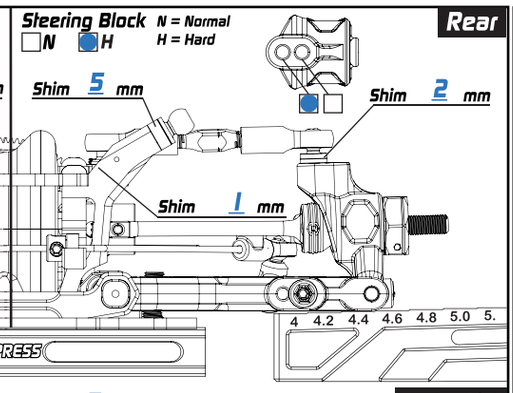

Camber Link

Item No:
XP:

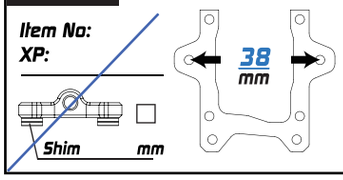

Shim ____ mm

5 mm	Hex Offset	5 mm	
1 °	Camber	1 °	
5 mm	Ride Height	5.4 mm	
6 mm	DownStop	5 mm	
1.3 mm	Sway Bar	1.3 mm	

Camber Link

Item No:
XP:

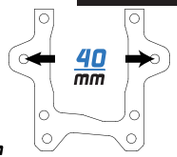

Shim ____ mm

Optional

On-Power Control System

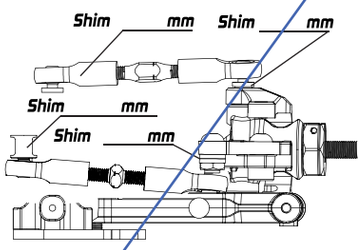

Shim ____ mm
Shim ____ mm
Shim ____ mm
Shim ____ mm

Hex Offset ____ mm
Camber ____ °
Ride Height ____ mm
DownStop ____ mm
Sway Bar ____ mm

Steering Block ☐ M ☐ H
Suspension Arm ☐ M ☐ H

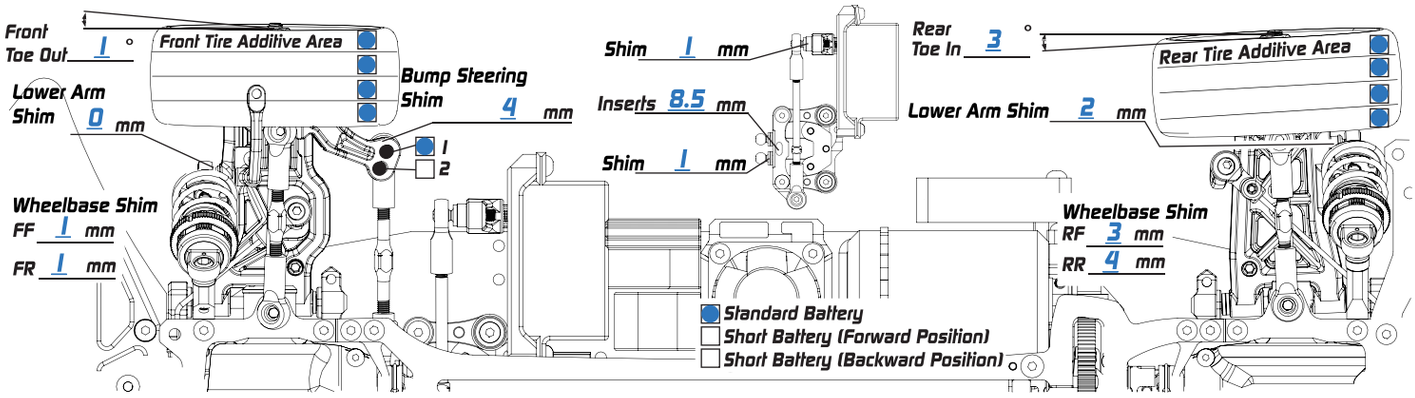

Suspension Mount Setup

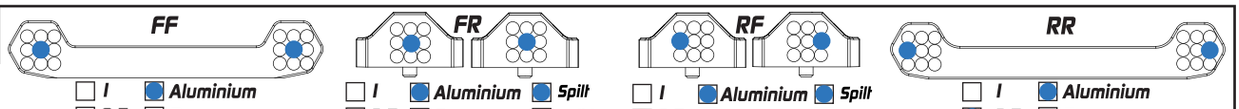

	FF	FR	RF	RR
	☐ 1 ☒ Aluminium	☐ 1 ☒ Aluminium ☒ Spilt	☐ 1 ☒ Aluminium ☒ Spilt	☐ 1 ☒ Aluminium
	☐ 0.5 ☐ Brass	☐ 0.5 ☐ Brass ☐ Solid	☒ 0.5 ☐ Brass ☐ Solid	☒ 0.5 ☐ Brass
Mount Spacer	0 mm	0 mm	0.5 mm	0.5 mm

Flex Control

Upper Deck Thick 2 mm

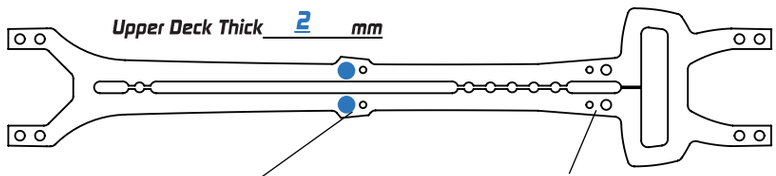

☒ Graphite Chassis
☐ Aluminum Chassis

☒ Upper Deck Stiffener (Plastic) ☐
☐ Upper Deck Stiffener (Aluminum) ☐

Damper Setup

	Front	Rear
Foam Insert	☐	☐
Hole In Cap	☐	☐
Spring	Purple TS2.5-3.0	Pink TS3.2
Oil	400cst	400cst
Rebound	100%	100%
Piston	4	4
Length	10.3mm	10.3mm

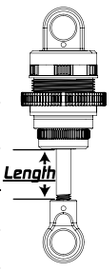

Transmission Setup

Front		Rear
Spool	Diff.	Gear Diff
/ g	Oil	15000cst / g

Bevel Gear ____
Spur 64 P/ 94 T Pinon 64 P/ 32 T
Final Drive Ratio 6.90 : 1

Formula

$$\text{Final Drive Ratio} = \left(\frac{\text{Spur}}{\text{Pinon}} \times \frac{\text{Internal Ratio}}{2.353}\right) : 1$$

Others

Servo: Sanwa | Tires: Xpress 40x
Esc: Orca OE1
Motor: Orca 5.0T
Additive: Yellow V3
Body: Xtreme MTB0413
Rear Wing: Xtreme

Remark

- RF & RR Suspension Mount +0.5mm Shim
- Remove F&R Shock Tower Bottom M3x6mm Screws

Easy to Drive !

XPRESS ARROW AT1 Set-Up Sheet

Latest Setups
www.rc-xpress.com/manuals-setups-download

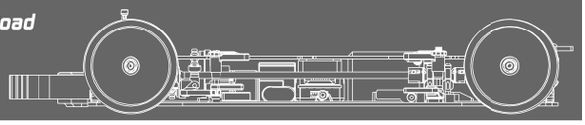

Driver: Eric Lam | Track Surface: Asphalt | Track Temperature:

Date: 2021 Dec 19 (HKRCSA 2021) | Track Traction: Medium | Result: TQ+A2 | Air Temperature: 20 °C

Track: Tom Racing Circuit | Country: Hong Kong | Best Lap: 15.624 | Humidity: | Remark:

Front

Suspension Arm (N = Normal, H = Hard): ☐ N ☒ H
C-Hub: ☐ N ☒ H
Steering Block: ☐ N ☒ H

Shim 1.5 mm
Shim 2 mm
Shim 2 mm

Rear

Steering Block (N = Normal, H = Hard): ☐ N ☒ H

Shim 2 mm
Shim 2 mm
Shim 1.5 mm

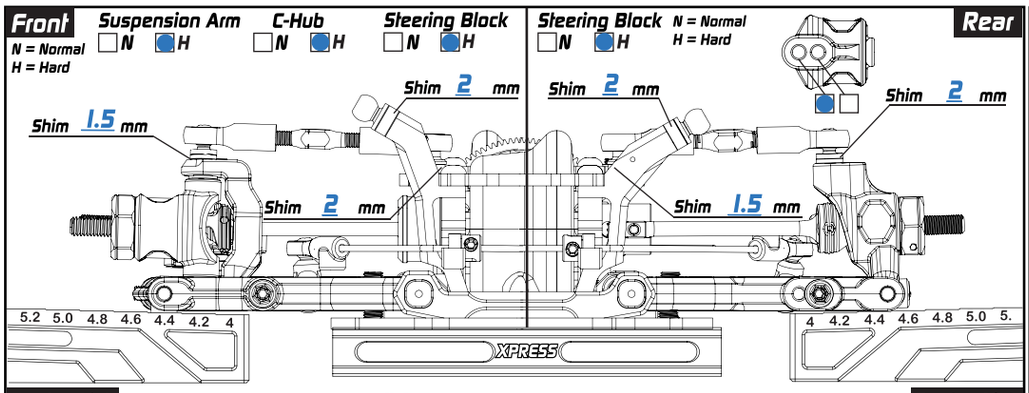

Optional — On-Power Control System

Shim mm Shim mm
Shim mm
Shim mm

Hex Offset mm
Camber °
Ride Height mm
DownStop mm
Sway Bar mm

Steering Block ☐ M ☐ H
Suspension Arm ☐ M ☐ H

Camber Link

Item No:
XP:
Shim mm
42 mm

4.25 mm	Hex Offset	4.5 mm	
1.5 °	Camber	0.5 °	
5.2 mm	Ride Height	6.4 mm	
6 mm	DownStop	4.6 mm	
1.3 mm	Sway Bar	1.3 mm	

Camber Link

Item No:
XP:
Shim mm
46 mm

Front Toe Out 1.5 °

Front Tire Additive Area

Lower Arm Shim 0 mm

Bump Steering Shim 4 mm
☒ 1
☐ 2

Wheelbase Shim
FF 1 mm
FR 1 mm

Shim 0 mm
Inserts 9 mm
Shim 1 mm

Rear Toe In 2 °

Rear Tire Additive Area

Lower Arm Shim 2 mm

Wheelbase Shim
RF 2 mm
RR 5 mm

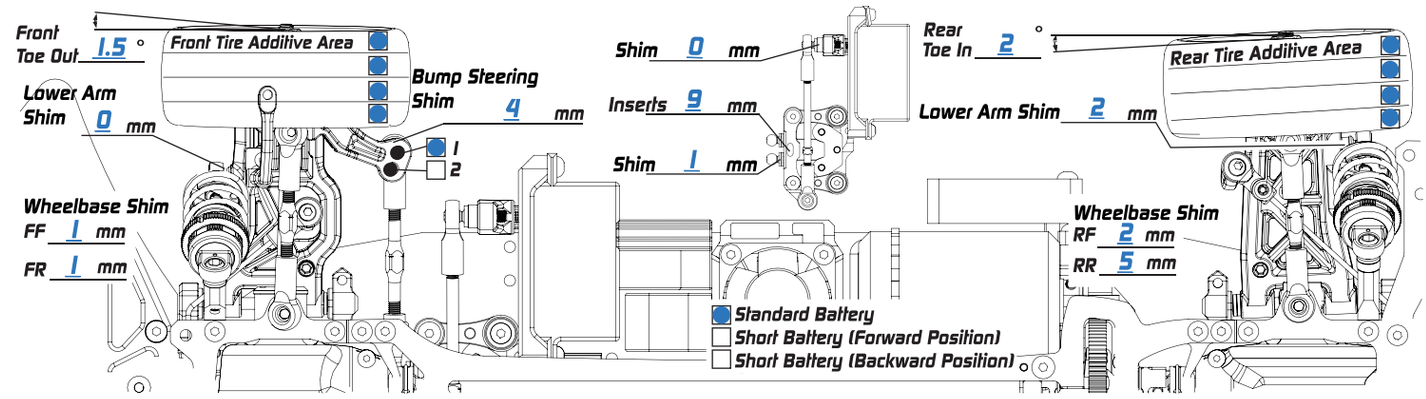

☒ Standard Battery
☐ Short Battery (Forward Position)
☐ Short Battery (Backward Position)

Suspension Mount Setup

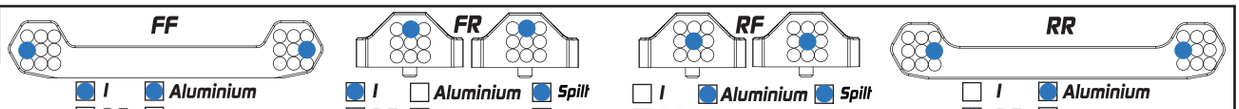

FF	FR	RF	RR
☒ 1	☒ 1	☐ 1	☐ 1
☒ Aluminium	☐ Aluminium	☒ Aluminium	☒ Aluminium
☐ 0.5	☐ 0.5	☐ 0.5	☒ 0.5
☐ Brass	☒ Brass	☐ Brass	☐ Brass
	☒ Spilt	☒ Spilt	
	☐ Solid	☐ Solid	
Mount Spacer 0 mm	Mount Spacer 0 mm	Mount Spacer 1.5 mm	Mount Spacer 1.5 mm

Flex Control

Upper Deck Thick 2 mm

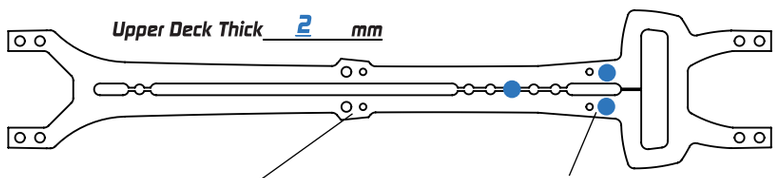

☒ Graphite Chassis
☐ Aluminum Chassis

☐ Upper Deck Stiffener (Plastic)
☐ Upper Deck Stiffener (Aluminum) ☒

Damper Setup

	Front	Rear
Foam Insert	☐	☐
Hole In Cap	☒	☒
Spring	6.75T	C 2.8
Oil	350cst	400cst
Rebound	0	0
Piston	4	4
Length	10.5mm	10.5mm

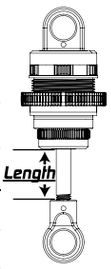

Transmission Setup

Front		Rear
Gear Diff	Diff.	Gear Diff
500k cst / 1 g	Oil	15000cst / 1 g

Bevel Gear:
Spur 64 P/ 90 T Pinon 64 P/ 47 T
Final Drive Ratio 4.50 : 1

Formula

$$\text{Final Drive Ratio} = \left(\frac{\text{Spur}}{\text{Pinon}} \times \frac{\text{Internal Ratio}}{2.353}\right) : 1$$

Others

Servo: Sanwa | Tires: Xpress 40X
Esc: Orca Blinky Pro
Motor: Orca 13.5T
Additive: RED SPIDER GRIP
Body: Xtreme MTB0418
Rear Wing: STD

Remark

XPRESS ARROW AT1

Latest Setups
www.rc-xpress.com/manuals-setups-download

Set-Up Sheet

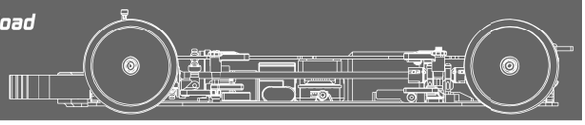

Driver _____ Track Surface _____ Track Temperature _____

Date _____ Track Traction _____ Result _____ Air Temperature _____

Track _____ Country _____ Best Lap _____ Humidity _____ Remark _____

Front

Suspension Arm ☐ N ☐ H
C-Hub ☐ N ☐ H
Steering Block ☐ N ☐ H
N = Normal
H = Hard

Shim ____ mm
Shim ____ mm
Shim ____ mm

Rear

Steering Block ☐ N ☐ H
N = Normal
H = Hard

Shim ____ mm
Shim ____ mm
Shim ____ mm

5.2 5.0 4.8 4.6 4.4 4.2 4 | 4 4.2 4.4 4.6 4.8 5.0 5.

XPRESS

Camber Link

Item No:
XP: _____
☐
Shim ____ mm
mm

____ mm Hex Offset ____ mm
____ ° Camber ____ °
____ mm Ride Height ____ mm
____ mm DownStop ____ mm
____ mm Sway Bar ____ mm

Camber Link

Item No:
XP: _____
☐
Shim ____ mm
mm

Optional

On-Power Control System

Shim ____ mm
Shim ____ mm
Shim ____ mm
Shim ____ mm

Hex Offset ____ mm
Camber ____ °
Ride Height ____ mm
DownStop ____ mm
Sway Bar ____ mm

Steering Block ☐ M ☐ H
Suspension Arm ☐ M ☐ H

Front Toe Out ____ °
Front Tire Additive Area ☐ ☐ ☐ ☐
Lower Arm Shim ____ mm
Bump Steering Shim ____ mm
☐ 1
☐ 2
Wheelbase Shim
FF ____ mm
FR ____ mm

Shim ____ mm
Inserts ____ mm
Shim ____ mm

Rear Toe In ____ °
Rear Tire Additive Area ☐ ☐ ☐ ☐
Lower Arm Shim ____ mm
Wheelbase Shim
RF ____ mm
RR ____ mm

☐ Standard Battery
☐ Short Battery (Forward Position)
☐ Short Battery (Backward Position)

Suspension Mount Setup

FF
☐ 1 ☐ Aluminium
☐ 0.5 ☐ Brass
Mount Spacer ____ mm

FR
☐ 1 ☐ Aluminium ☐ Spilt
☐ 0.5 ☐ Brass ☐ Solid
Mount Spacer ____ mm

RF
☐ 1 ☐ Aluminium ☐ Spilt
☐ 0.5 ☐ Brass ☐ Solid
Mount Spacer ____ mm

RR
☐ 1 ☐ Aluminium
☐ 0.5 ☐ Brass
Mount Spacer ____ mm

Flex Control

Upper Deck Thick ____ mm

☐ Graphite Chassis
☐ Aluminum Chassis
☐ Upper Deck Stiffener (Plastic) ☐
☐ Upper Deck Stiffener (Aluminum) ☐

Damper Setup

Foam Insert ☐
Hole In Cap ☐

Foam Insert ☐
Hole In Cap ☐

Front		Rear
_____	Spring	_____
_____	Oil	_____
_____	Rebound	_____
_____	Piston	_____
_____	Length	_____

Length

Transmission Setup

Front		Rear
_____	Diff.	_____
____ / ____ g	Oil	____ / ____ g

Bevel Gear _____
Spur ____ P/ ____ T Pinon ____ P/ ____ T
Final Drive Ratio _____ : 1

Formula

$$\text{Final Drive Ratio} = \left(\frac{\text{Spur}}{\text{Pinon}} \times \frac{\text{Internal Ratio}}{2.353}\right) : 1$$

Others

Servo _____ Tires _____
Esc _____
Motor _____
Additive _____
Body _____
Rear Wing _____

Remark

Note

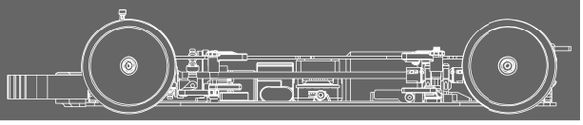

Manuals & Setups
www.rc-xpress.com/manuals-setups-download

Latest Parts & Hop-Ups Information
www.rc-xpress.com/arrow-at1-parts

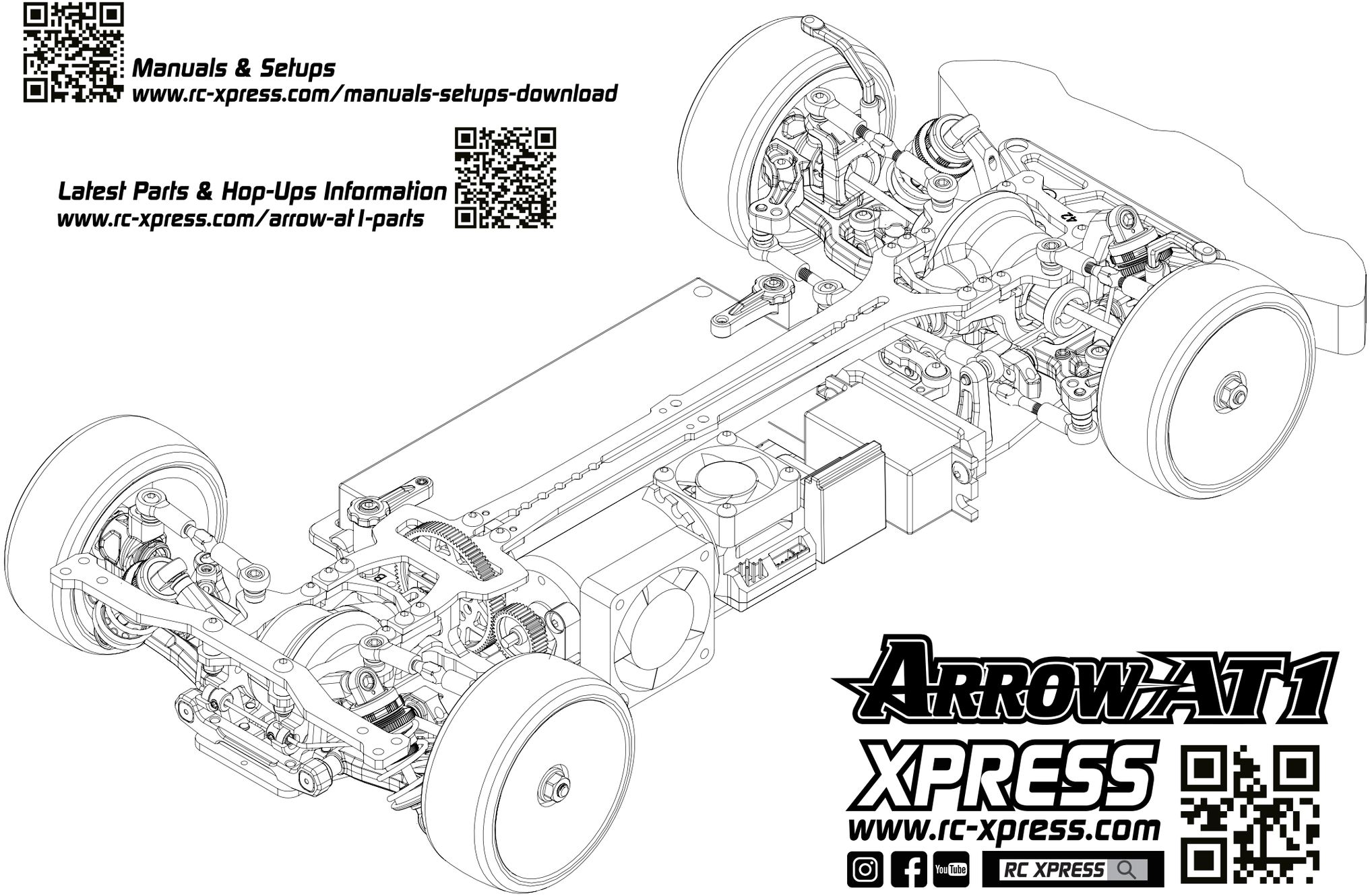

ARROW AT1

XPRESS
www.rc-xpress.com
RC XPRESS