vbe racing D10 DYNAMICS EDITION

SETUP SHEET

DRIVER Søren Boy Holst | DATE 07/1-2018 | EVENT DHI-Cup 2018

TRACK DHI | GRIP HIGH / MEDIUM / LOW | TRACK TEMP | HUMIDITY

COMPOSITION ASPHALT / INDOOR / OUTDOOR / CARPET | SURFACE BUMPY / SMOOTH | LAYOUT OPEN / MIXED / TIGHT

RESULT | BEST LAP 13,5

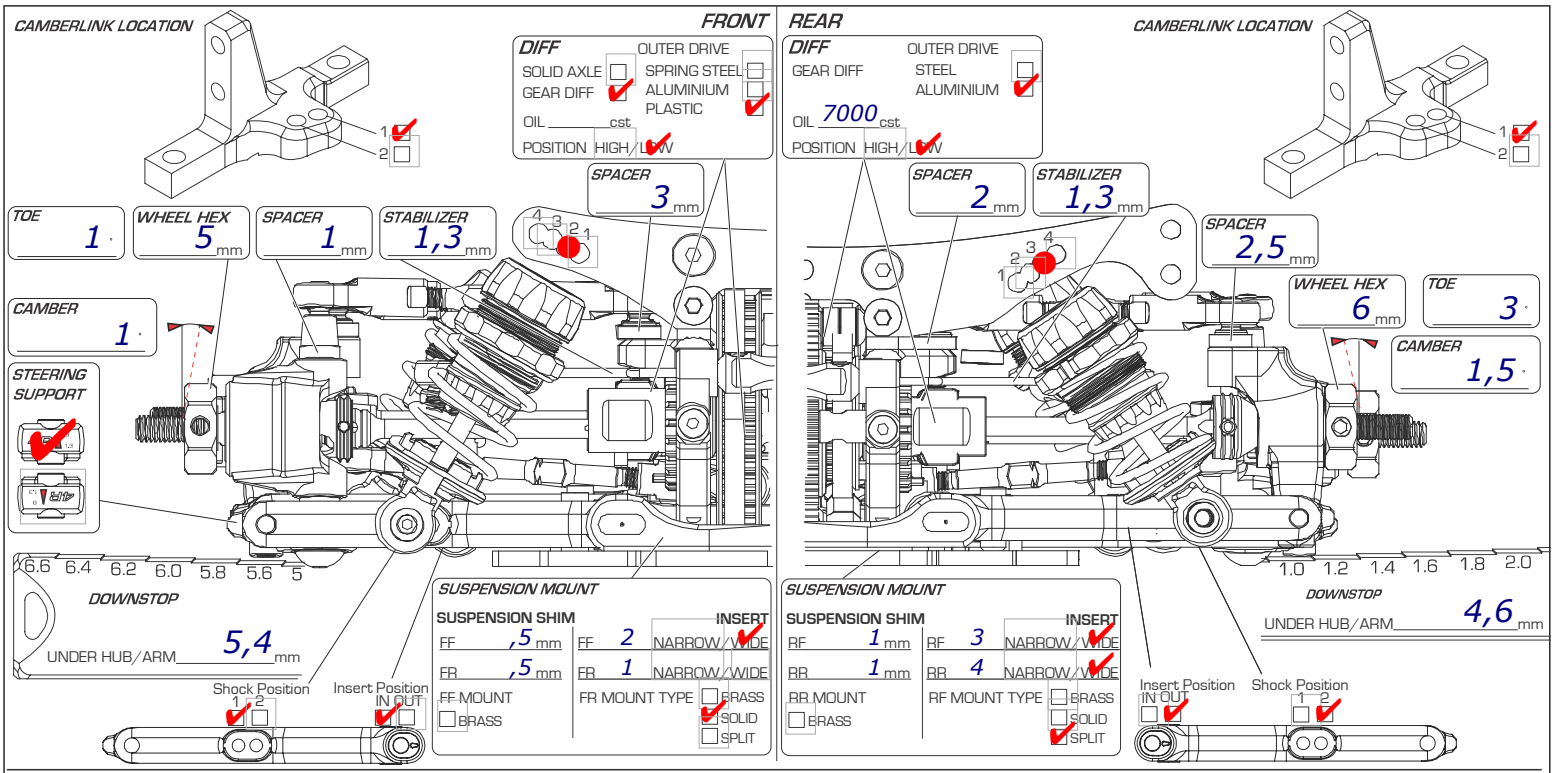

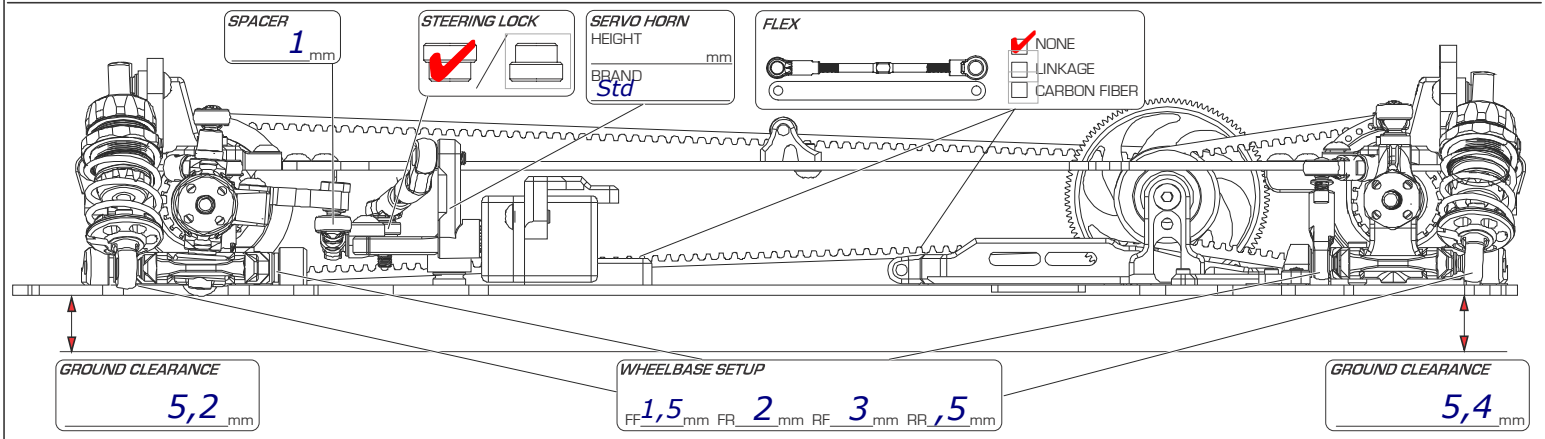

FRONT SHOCK	REAR SHOCK
PISTON 3 hole(s) / OTHERS	PISTON 3 hole(s) / OTHERS
OIL MR450	OIL MR450
SPRING SMJ Red	SPRING SMJ Blue
OIL SEALER CAP CLEAN / BLACK / BLUE / RED	
REBOUND 10 %	REBOUND 10 %
NOTES	NOTES

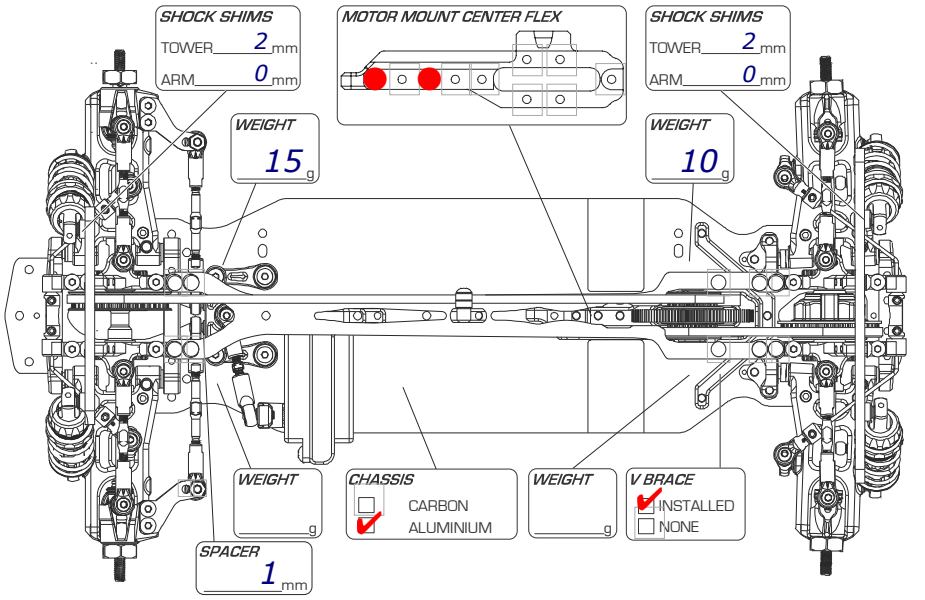

MOTOR LRP 13,5 Handout | SPUR 100 T | PINION 42 T | PITCH 64 T

TIRE LRP Handout 30' | TIRE INSERT LRP | WHEEL LRP

TIRE ADDICTIVE CS | BODY BittyDesign M410 ULT | WING Std

ESC Team Powers Radon Pro | BATTERY Team Powers 5800/100C

REMARKS

REMARKS

AmO - PetitRC.com