WILDFIRE 0.03

1/10 4WD ELECTRIC COMPETITION TOURING CAR KIT

ArnO / PetitRC

SETUP SHEET

DRIVER | DATE | EVENT

TRACK | GRIP HI / MED / LOW | TRACK TEMP | HUMIDITY

COMPOSITION ASPHALT (INDOOR/OUTDOOR)/CARPET | SURFACE BUMPY/SMOOTH | LAYOUT OPEN/MIXED/TIGHT

RESULT | BEST LAP

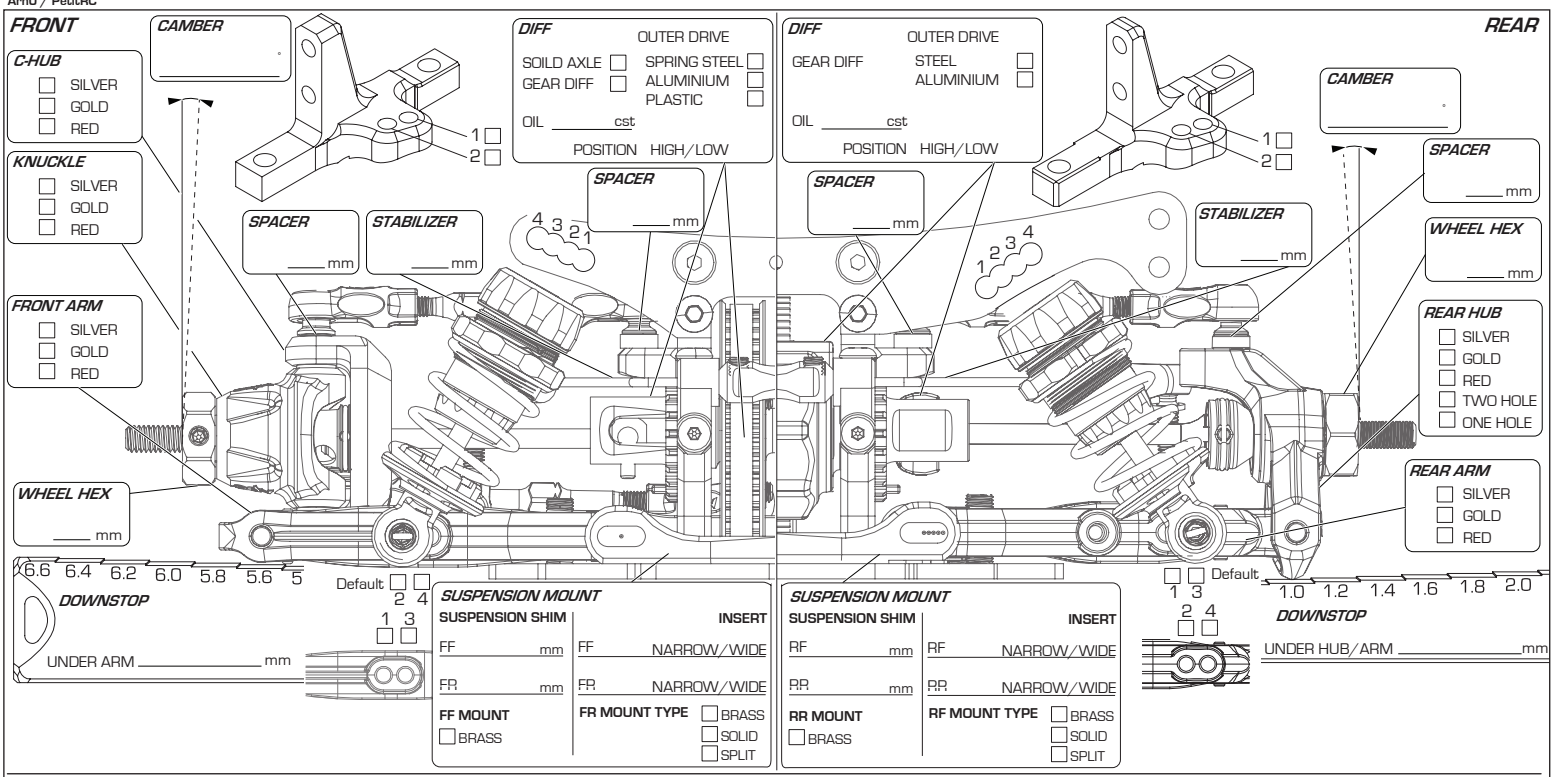

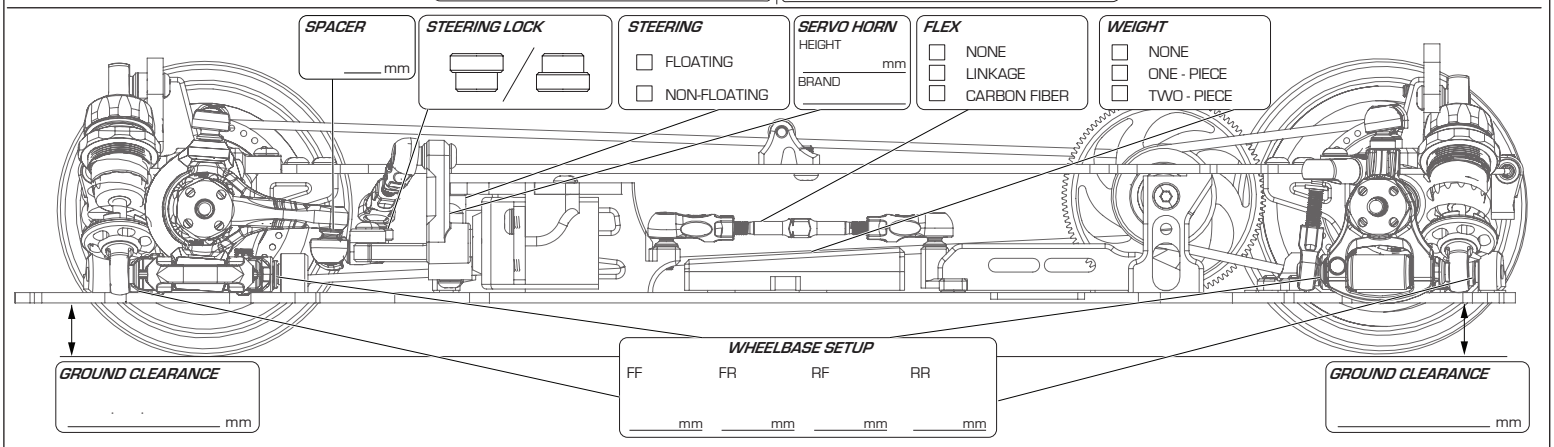

FRONT SHOCK	REAR SHOCK
PISTON 3 4 hole(s)	PISTON 3 4 hole(s)
OIL	OIL
SPRING	SPRING
SEALER CAP CLEAR / BLACK/BLUE / RED	SEALER CAP CLEAR / BLACK/BLUE / RED
REBOUND %	REBOUND %

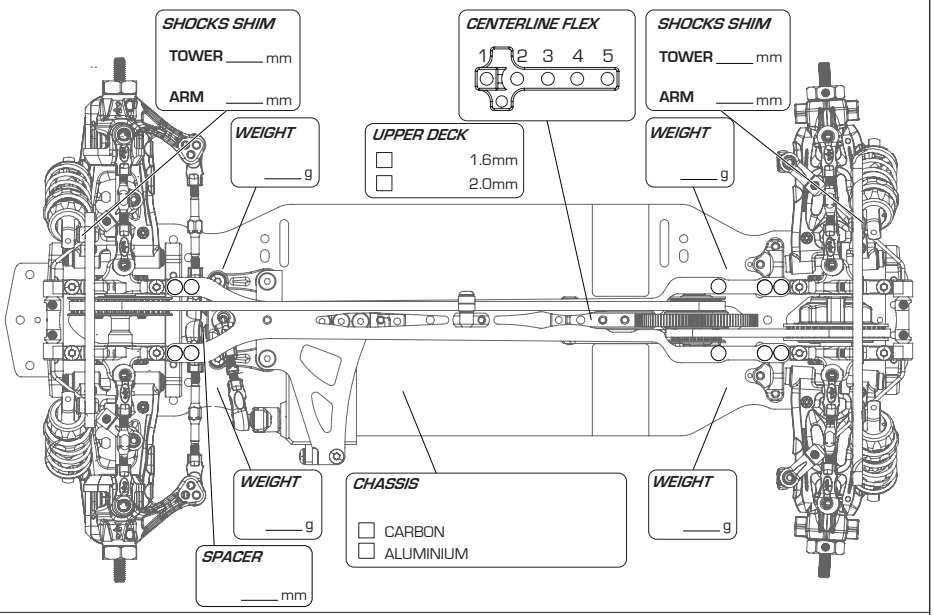

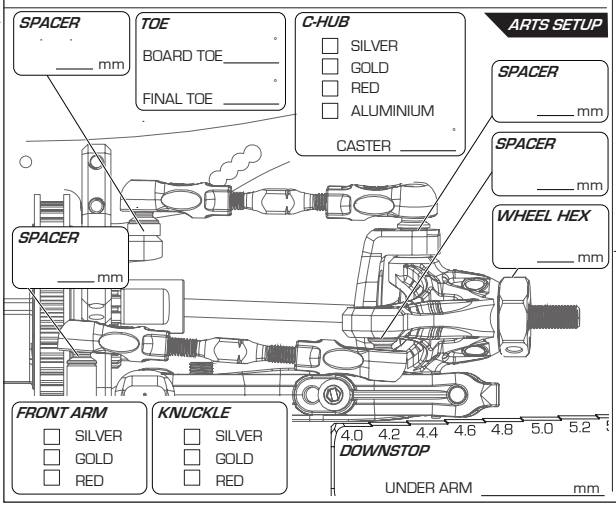

MOTOR	SPUR	T	PINION	T	PITCH	
TIRE	INSERT		WHEEL			
TIRE ADDITIVE	BODY		REAR WING			
ESC	BATTERY					