COMPETITION GRADE HIGH PERFORMANCE RADIO CONTROL RACING CAR CHASSIS KIT

WILDFIRE 0.09

1/10 4WD ELECTRIC COMPETITION TOURING CAR KIT

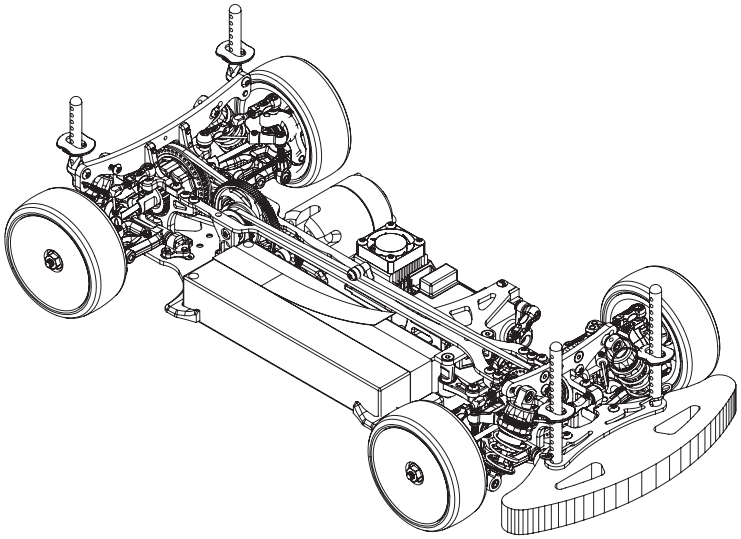

INSTRUCTIONS MANUAL

vbc racing

E

Thank you for purchasing VBC Racing product.

Things that we should remind you.
This VBC Racing kit is a high performance, racing grade car kit intended for experienced racers. The kit compose of VBC formulated composite materials, top quality full carbon fiber chassis and high grade 7075 material which will give you a competitive edge over the others.
Novice racer should seek advice from more experienced racer before assembly.
Always keep this instruction manual handy at all times for quick reference even after completing the assembly.

Before your assembly, sand the chassis edges.
Sand the chassis edges with #600 sand paper and apply CA glue to the edges and counter sink holes.

Need help or support.
If you need help or you would like to leave us a comment, please email to our support team: support@vbc-racing.com or visit our web site www.vbcracing.com

5 紙 内小箱 緩衝材 PP

1

Graphite Edges Protection Procedure

*Not included in this kit

Sand the chassis edges with #600 sand paper(not included) and apply CA glue(not included) to the edges of the chassis.

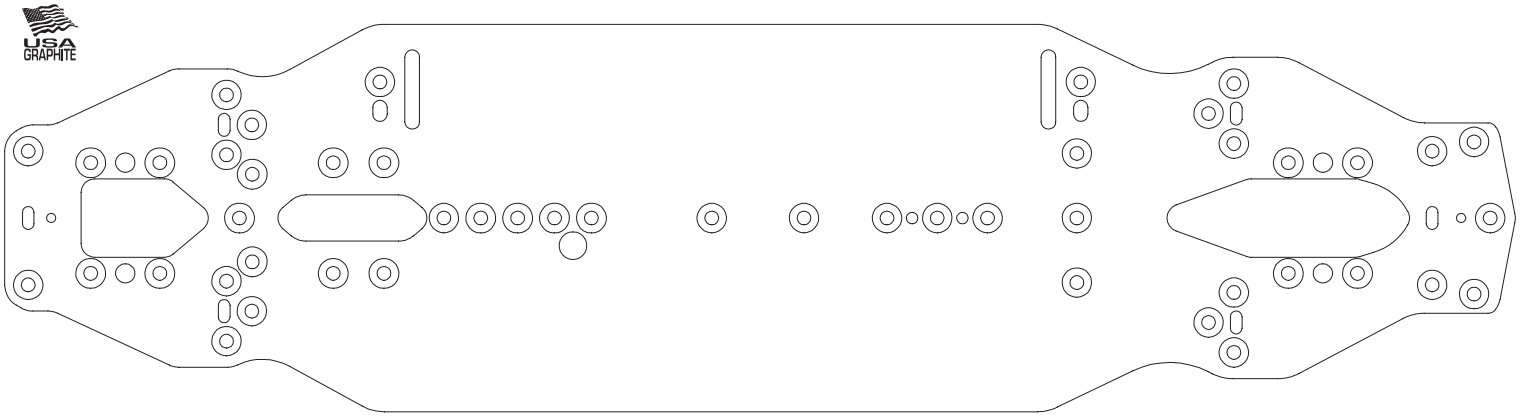

A-01-P31255 WildFireD09 Standard Graphite Chassis

Sand the below graphite edges with #600 sand paper and apply CA glue to the edges.

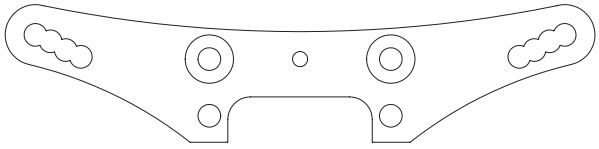

A-01-G30982 Graphite Front Shock Tower for TBBS

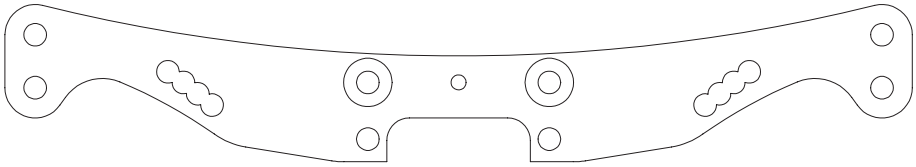

A-01-G30983 Graphite Rear Shock Tower for TBBS

© VBC Racing WILDFIRE D09

2

Rear Gear Diff Assembly

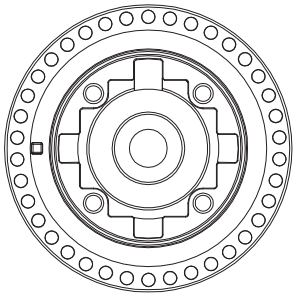

Gear Diff Housing A-03-VBC-0016 x 1

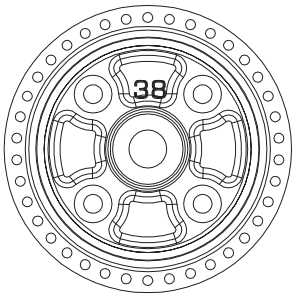

Gear Diff Pully 38T A-03-VBC-0017 x 1

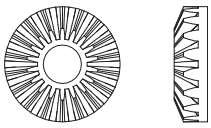

Diff Gear A-03-VBC-0019 x 2

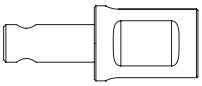

Lightweight Gear Differential Cup B02-P30888 x 2

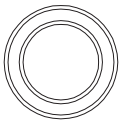

10 x 15 Ball Bearing C-02-BB-1510-P x 2

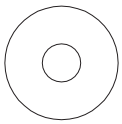

15 x 0.3 Shim B-02-VBC-0077 x 2

M2 x 10 Shaft Pin B-02-VBC-0020 x 2

Diff Shaft Sealer O-Ring B-03-VBC-0008 x 2

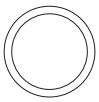

10mm x 12mm x 0.3mm Spacer C-02-P30914 x 1

Rear Gear Diff Left Side

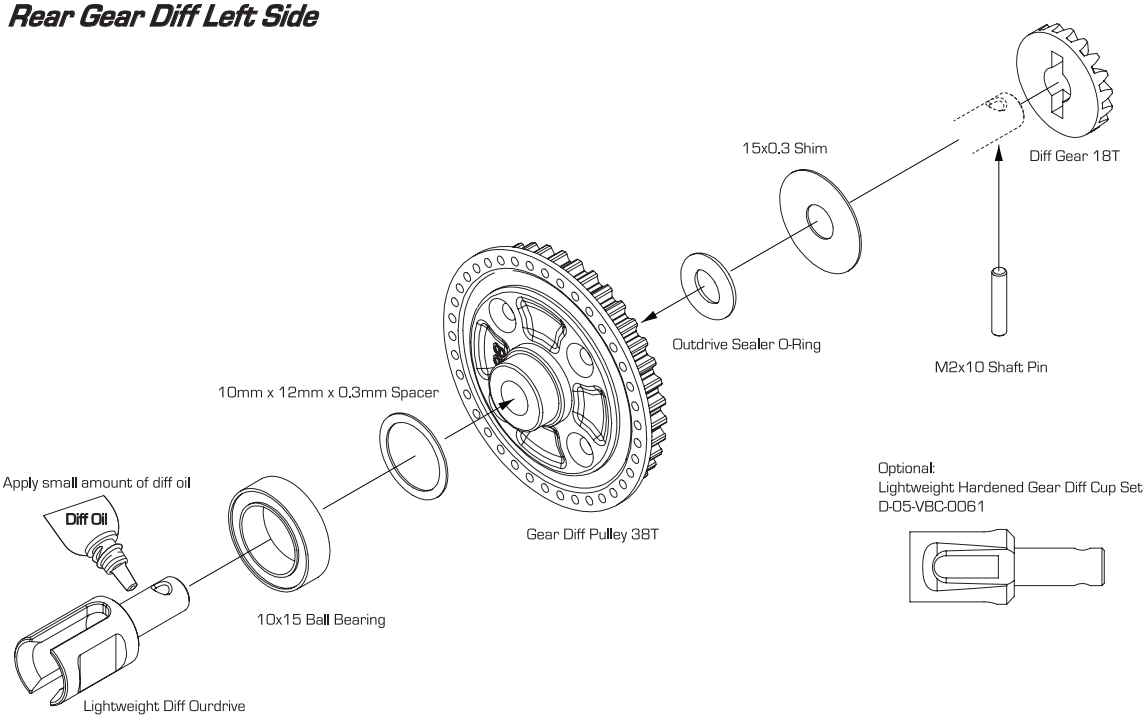

Rear Gear Diff Right Side

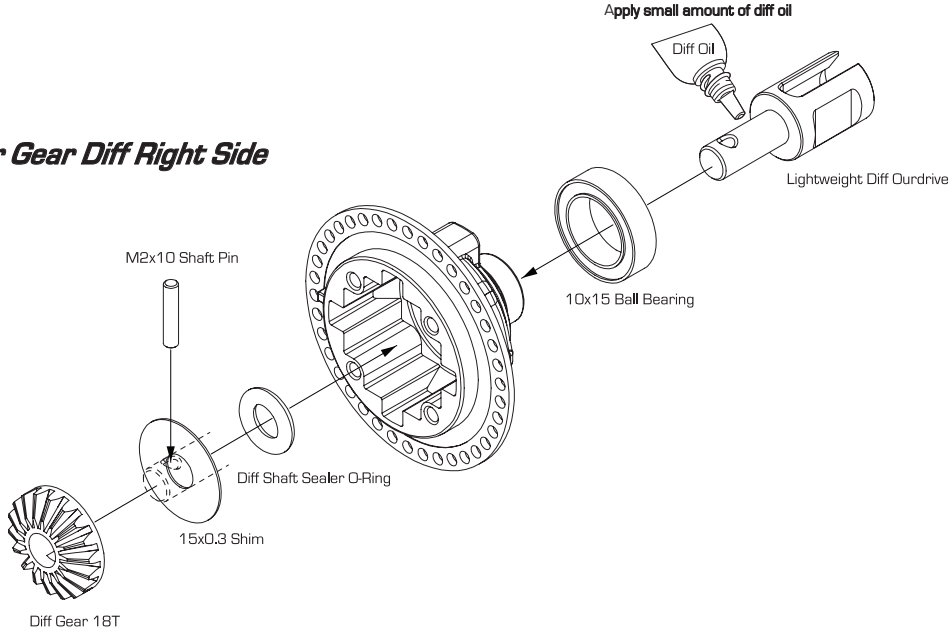

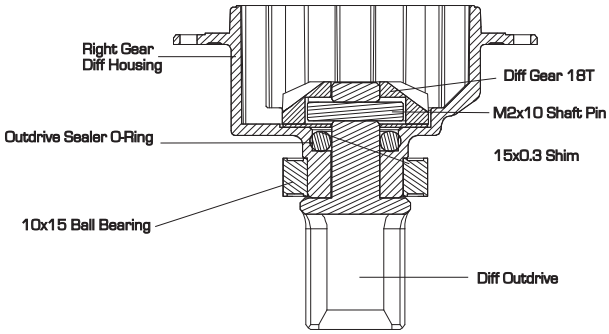

Rear Gear Diff Right Side Assembly Cross Section

© VBC Racing WILDFIRE D09

3

Rear Gear Diff Assembly Continue

Diff Gear 10T A-03-VBC-0018 x 4

9.5x0.2mm Shim B-02-VBC-0078 x 4

M2.6x10 Flathead Screw C-02-SC-F2.6x10 x 4

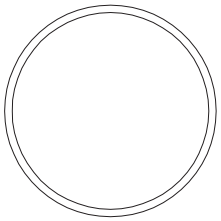

Diff Housing Sealer O-Ring B-03-VBC-0005 x 1

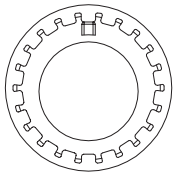

Belt Tension Adjuster Ring A-03-VBC-0047 x 2

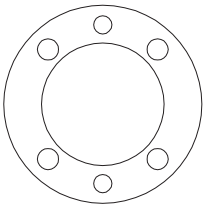

Seal Gasket B-03-VBC-0004 x 1

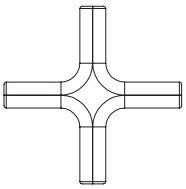

Diff Gear Shaft A-03-VBC-0020 x 1

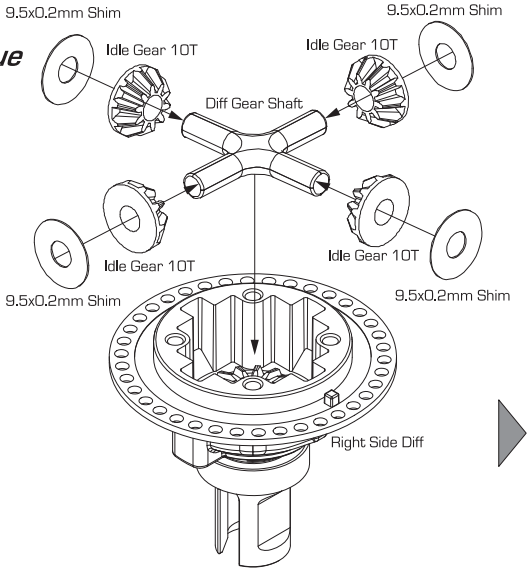

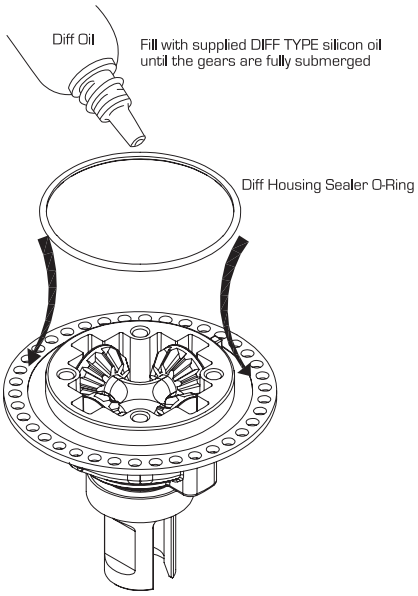

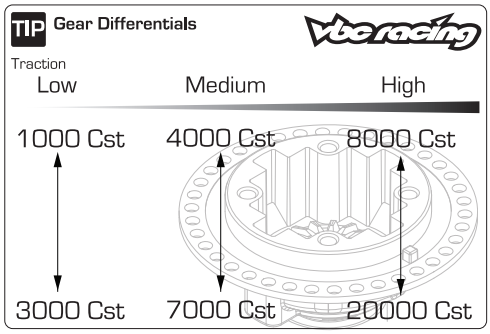

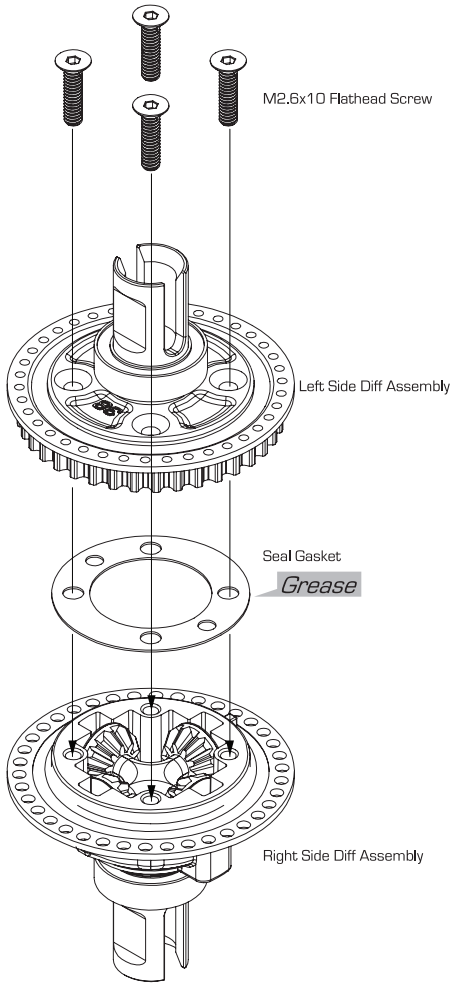

Place Seal Gasket to the left side diff assembly before putting the right side diff together

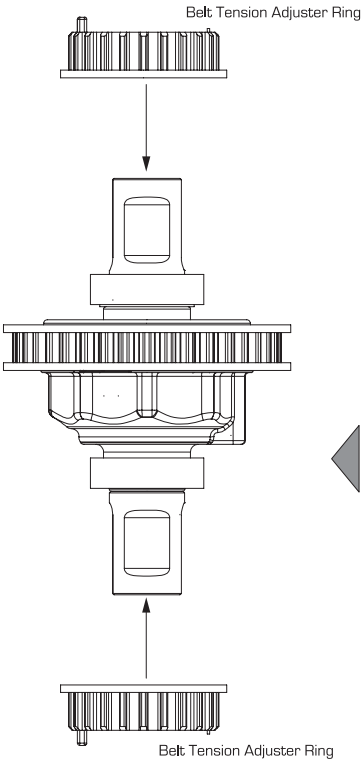

© VBC Racing WILDFIRE D09

4

Rear Drivetrain Assembly

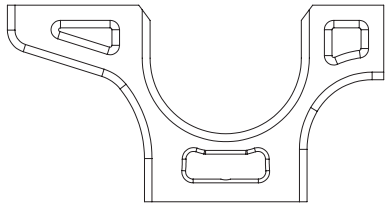

Wildfire D09 Lower Bulkhead B-02-P31242 X 4

M3x6 Flathead C-02-SC-F0306 X 12

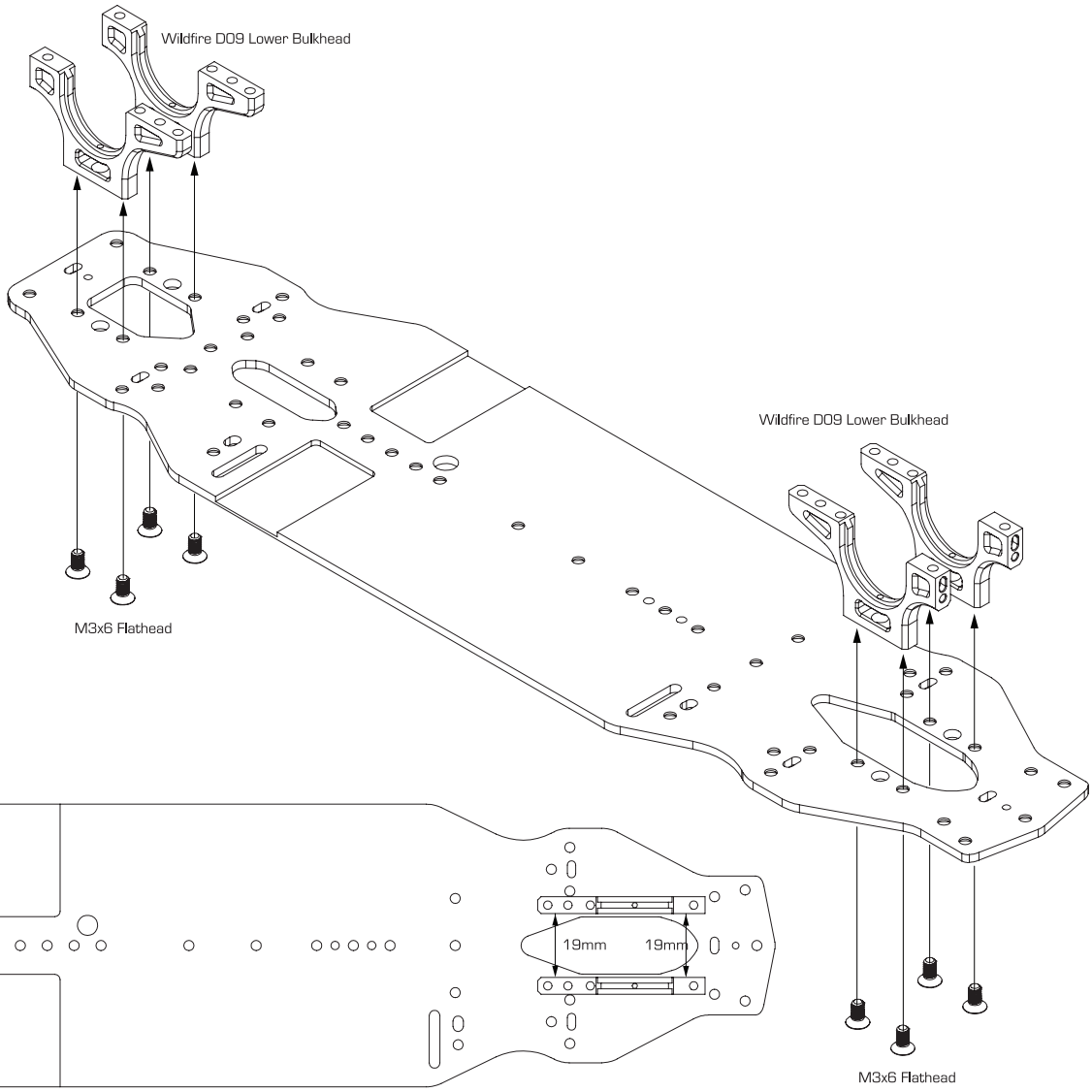

5

Make Sure The Front and Rear Lower Bulkhead Is Aligned In a Staight Line

Suspension Mount Assembly

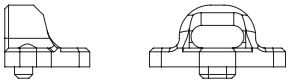

D09 Split Mount B-02-P31312 X 2

Suspension Mount Composite Insert 1 303110424 X 2

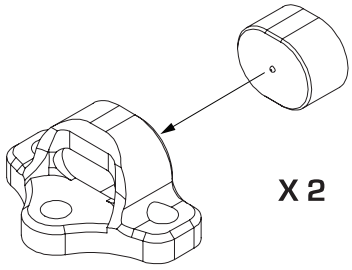

X 2

TIP Spilt Mount Insert chart

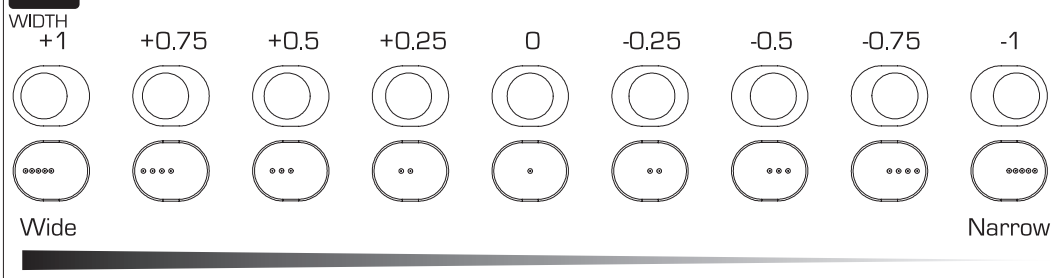

Suitable for High Traction

Suitable for Low Traction

© VBC Racing WILDFIRE D09

6

Motor Mount and Spilt Mount Assembly

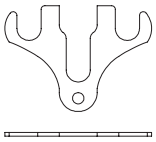

Center Suspension Mount Shim(0.5mm) X 2

M3x6 Flathead C-02-SC-F0306 x 6

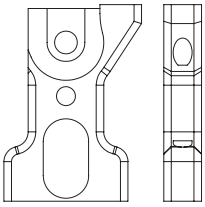

WildFire D09 Motor Mount_B B-02-P31249 X 1

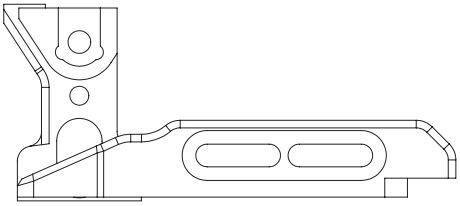

WildFire D09 Motor Mount_A B-02-P31248 X 1

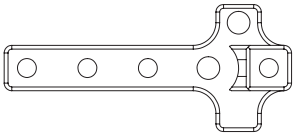

WildFire D09 Motor Mount_C B-02-P31250 X 1

M3x6 Roundhead C-02-SC-R0306 X 1

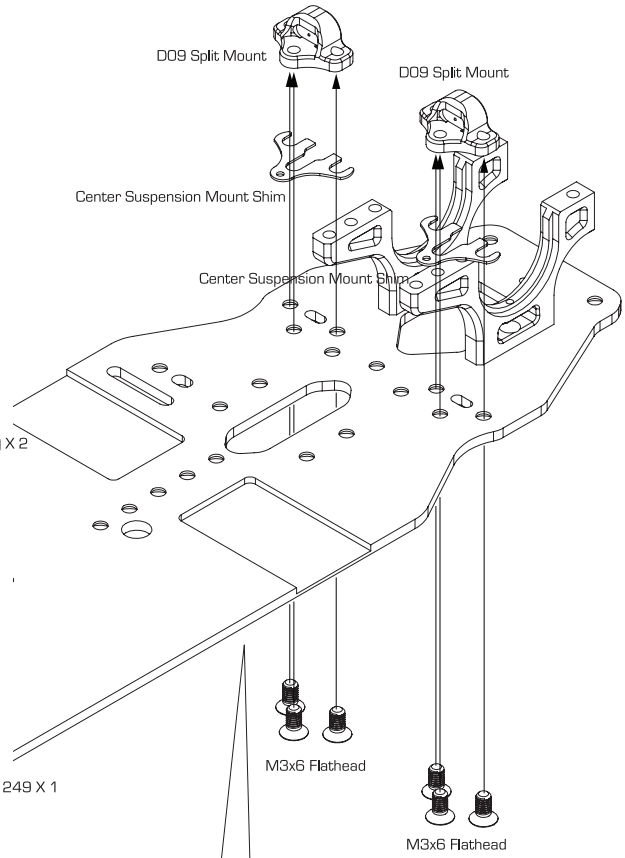

OPTION PARTS

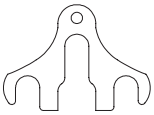

D-05-VBC-0231
Center Suspension Shim (1mm, 0.5mm)

TIP *Spilt Mount Setup for Different Flex*

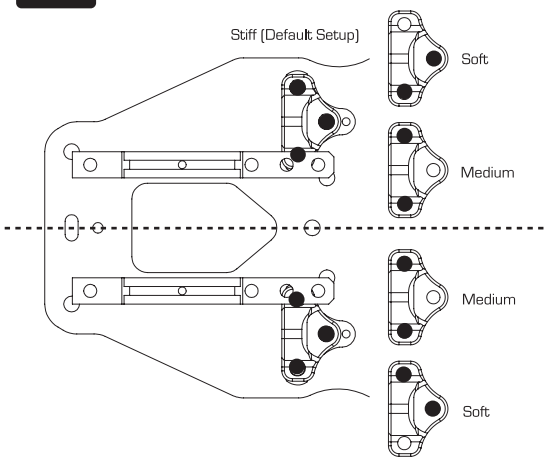

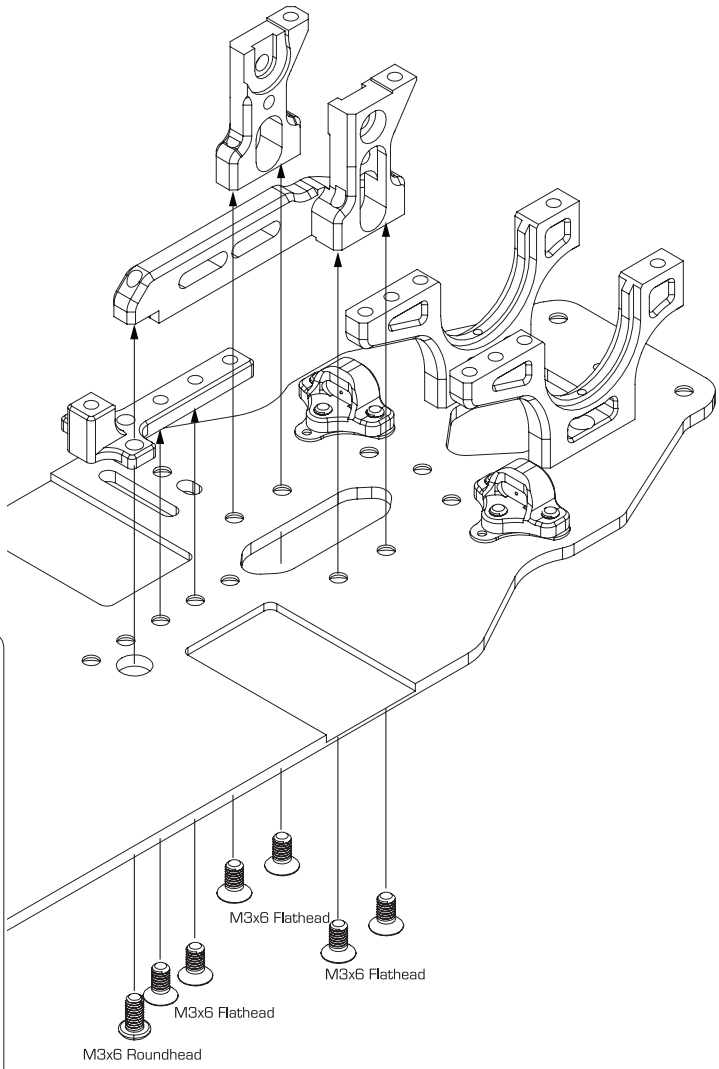

TIP *Motor Mount Setup for Different Flex*

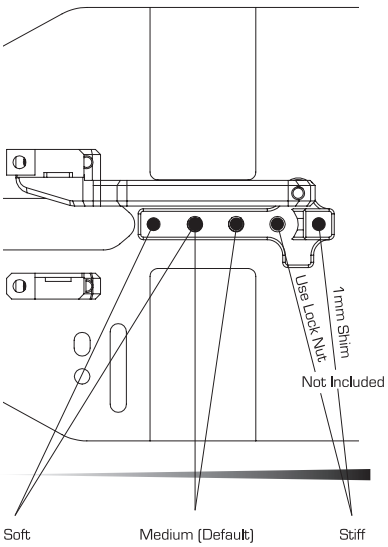

© VBC Racing WILDFIRE D09

7

Floating Steering System Assembly

Ball Connector (5mm Length) B-02-VBC-3021 x 2

5x8 Ball Bearing C-02-BB-0805-B x 4

3x6 Ball Bearing C-02-BB-0603 x 2

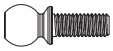

Ball Connector (7.5mm Lenght)
B-02-VBC-3022 x 1

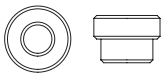

D09 POM Steering Stopper A-03-P31176 x 1

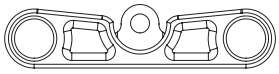

D09 Steering Bridge B-02-P31171 x 1

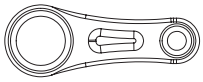

D09 Steering Arm B-02-P31172 x 2

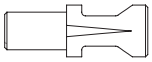

D09 Steering Top-mounted Post
B-02-P31172 x 2

8

M3x6 Roundhead C-02-SC-R0306 x 5

D09 Servo Mount Extension Plate B-02-P31313 x 1

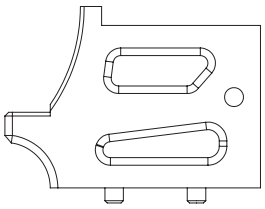

D09 Servo Mount Standoff B-02-P31297 x 1

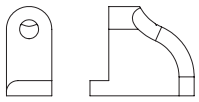

D09 Servo Side Mount B-02-P31298 x 1

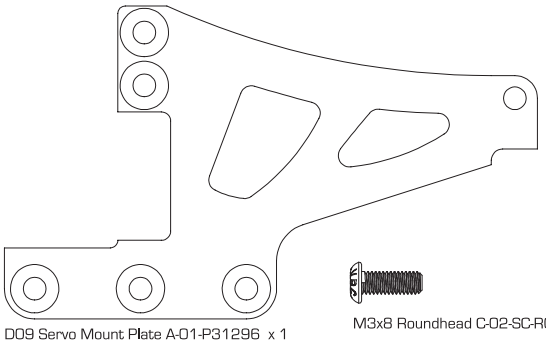

D09 Servo Mount Plate A-01-P31296 x 1

M3x8 Roundhead C-02-SC-R0308 x 3

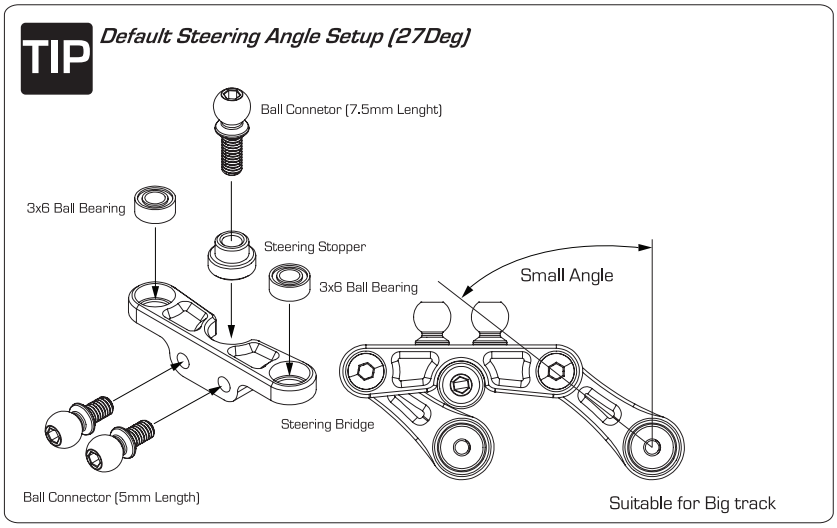

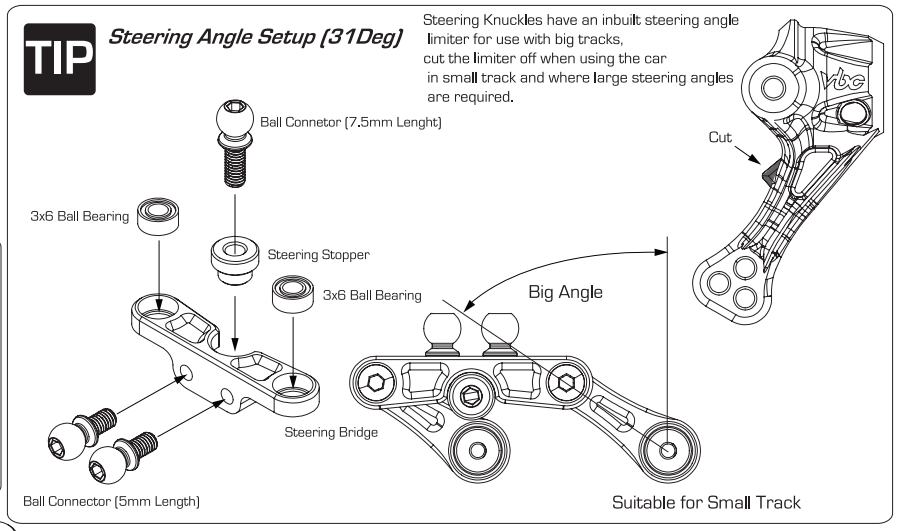

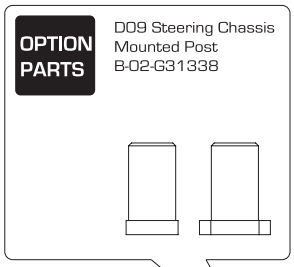

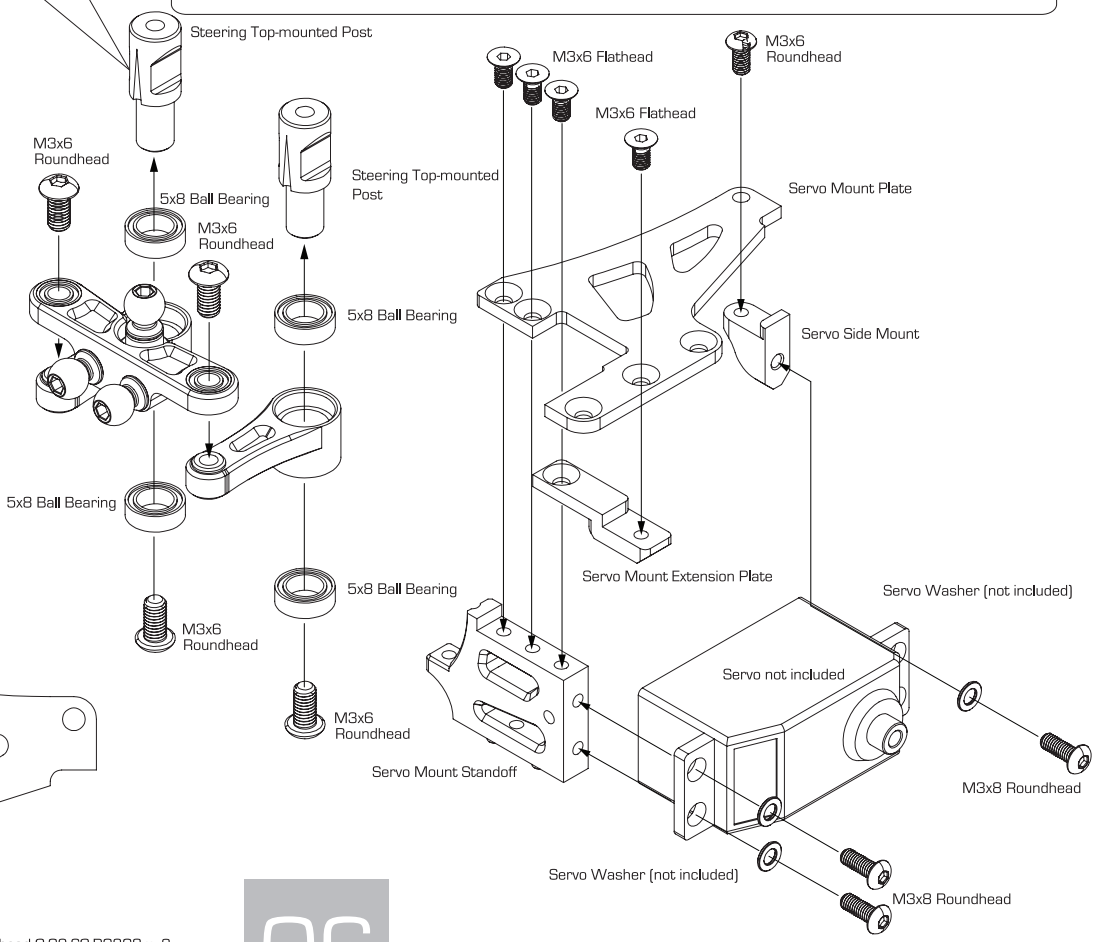

© VBC Racing WILDFIRE D09

9

Steering System Assembly

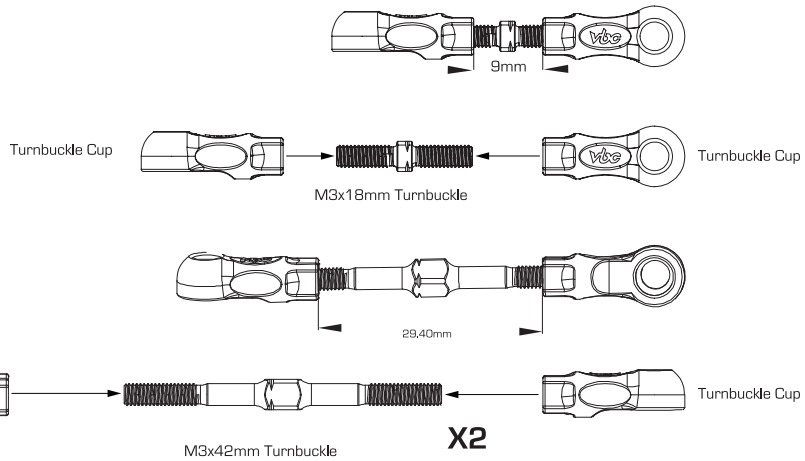

M3x6 Flathead C-02-SC-F0306 x 5

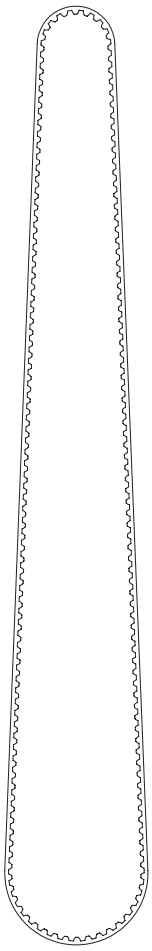

WildFireD06 Front Belt B-03-VBC-3001 x 1

M3x42mm Turnbuckle B-02-VBC-0037 x 2

M3x18mm Turnbuckle B-02-VBC-0038 x 1

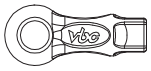

Turnbuckle Cup A-03-VBC-0039 x 6

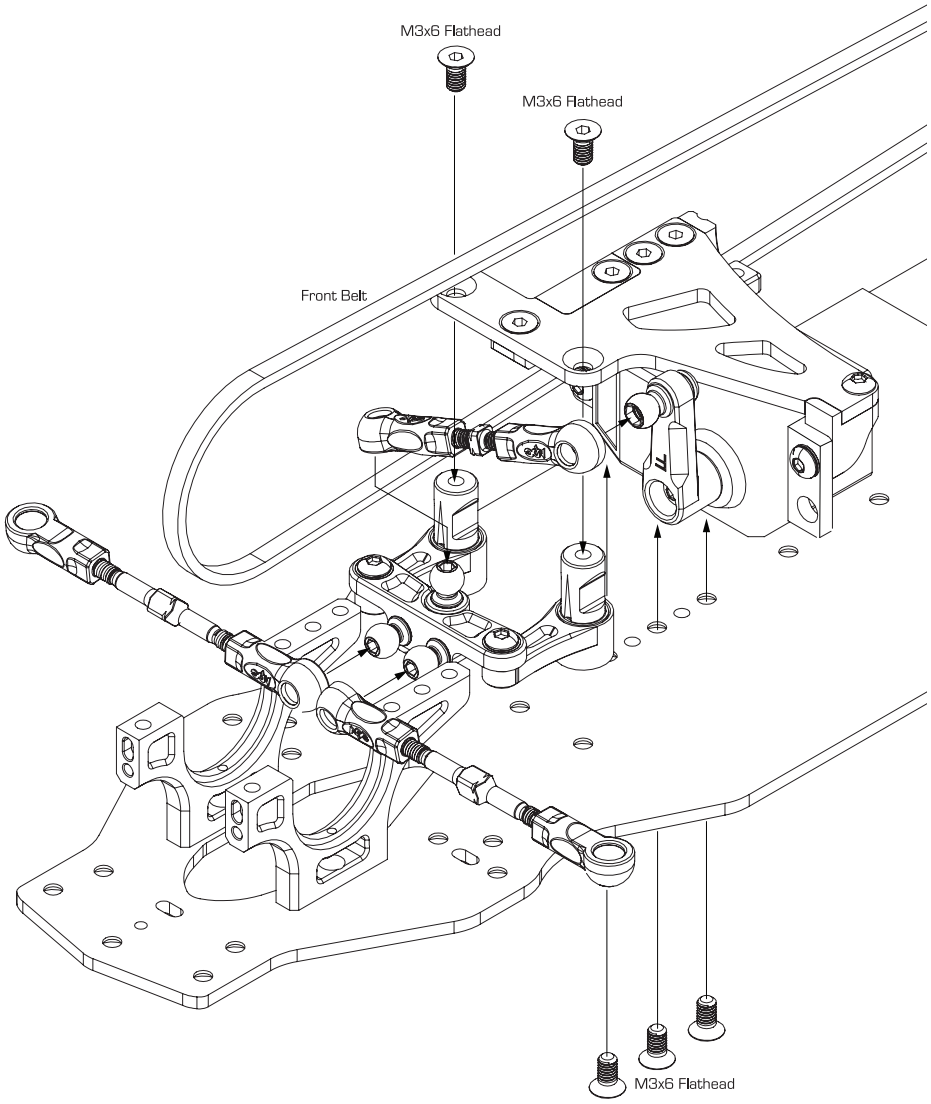

10

FR Mount and Upper Deck assembly

Suspension Mount Composite Insert 1 303110424 X 2

D09 FR One Piece Mount B-02-P31318 x 1

M3x6 Flathead C-02-SC-F0306 x 2

WildFireD07 Center Belt Tensioner B-02-P30158 x 1

3x6mm Ball Bearing C-02-BB-0603 x 2

3x5x0.3mm Shim B-02-VBC-0101 x 3

M3x10 Roundhead C-02-SC-R0310 x 1

M3x6 Roundhead Screw C-02-SC-R0306 x 1

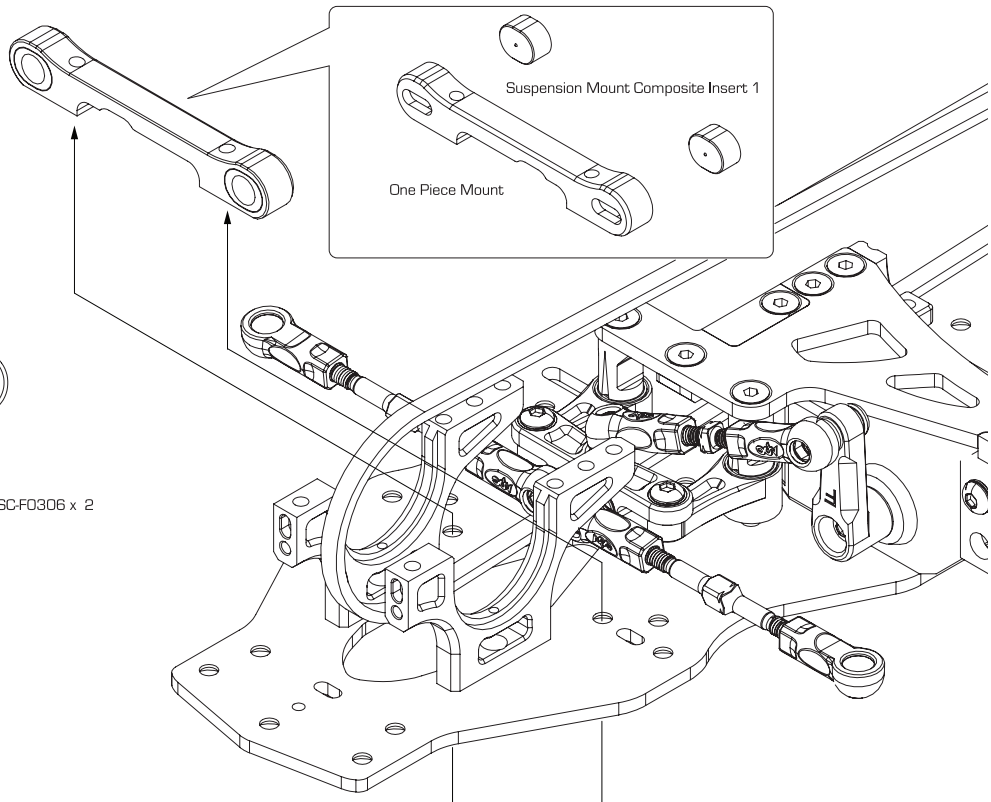

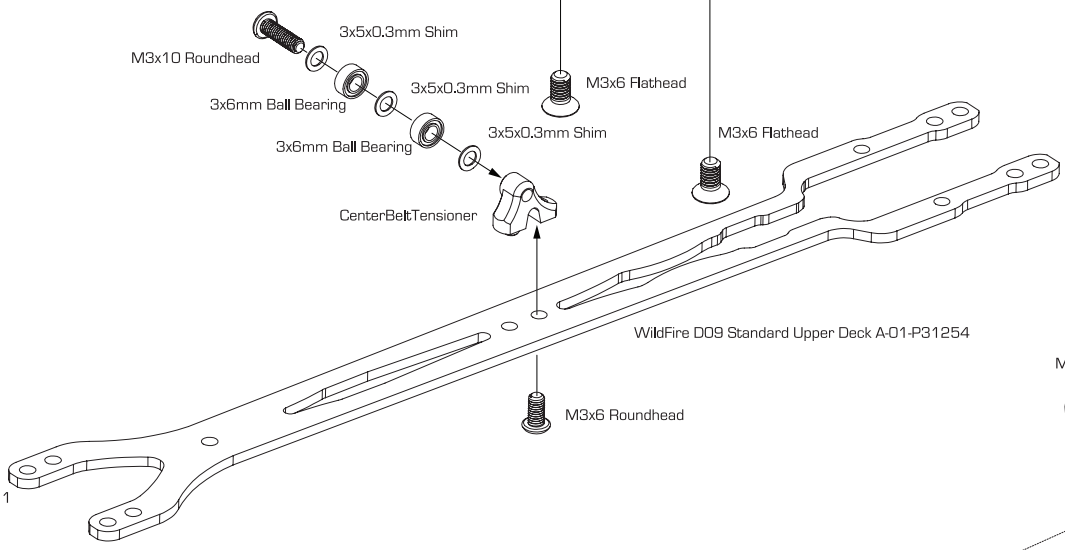

11

WildFireD07 Alu Center Pully Adaptor B-02-P30219 x 1

WildFireD07 Alu Spur Gear Adaptor B-02-P30220 x 1

WildFireD07 Alu Center Pully Spacer B-02-P30144 x 1

D09 Center Pully Shaft C-02-P31253 x 1

M3x4 Round Head Screw
C-02-SC-R0304 x 3

5x8mm Ball Bearing C-02-BB-0805-B x 3

M4 E-Clip C-02-P31343 x 1

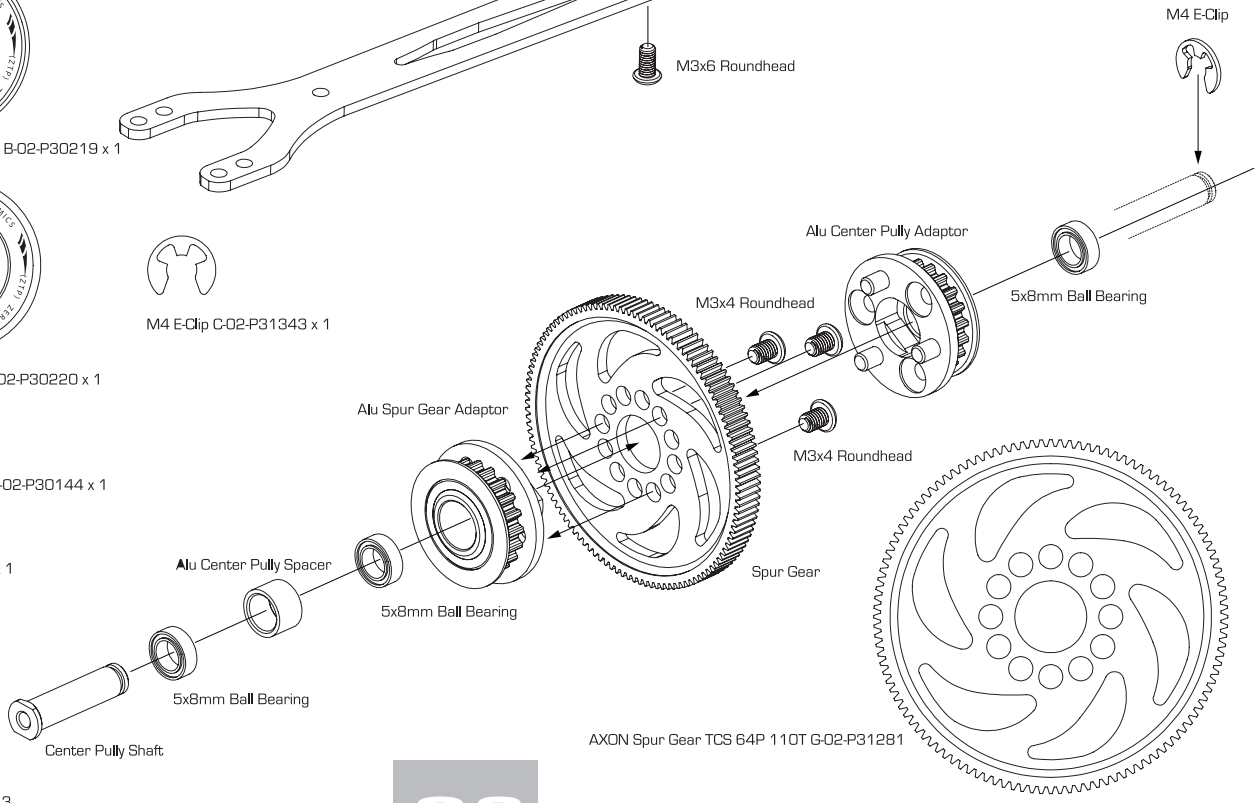

© VBC Racing WILDFIRE D09

12

Upper Deck Assembly

M3x6 Roundhead C-02-SC-R0306 x 10

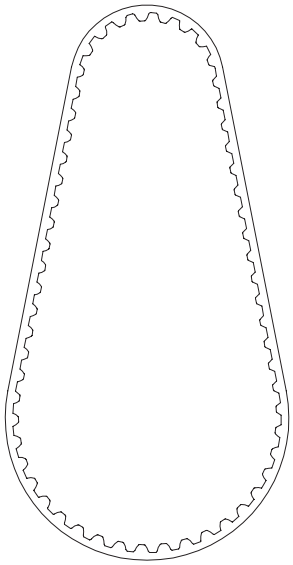

WildFireD09 Rear Belt B-03-G30288 x 1

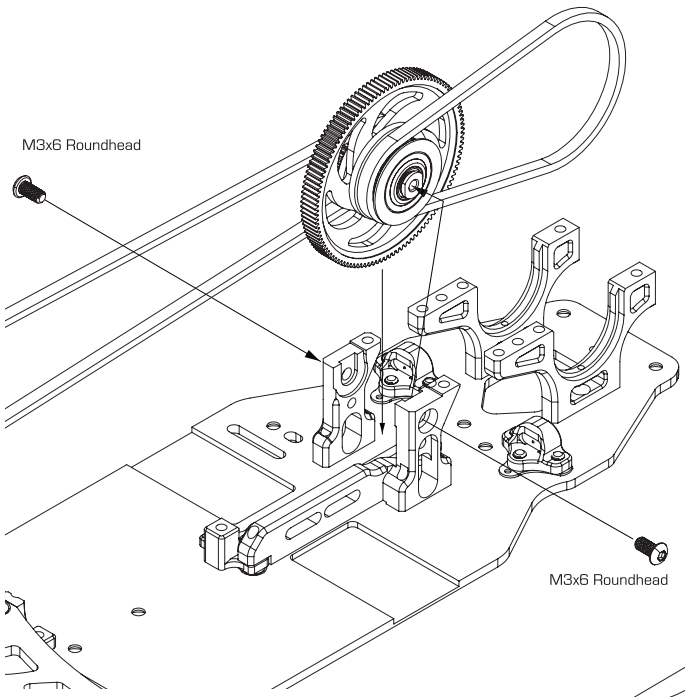

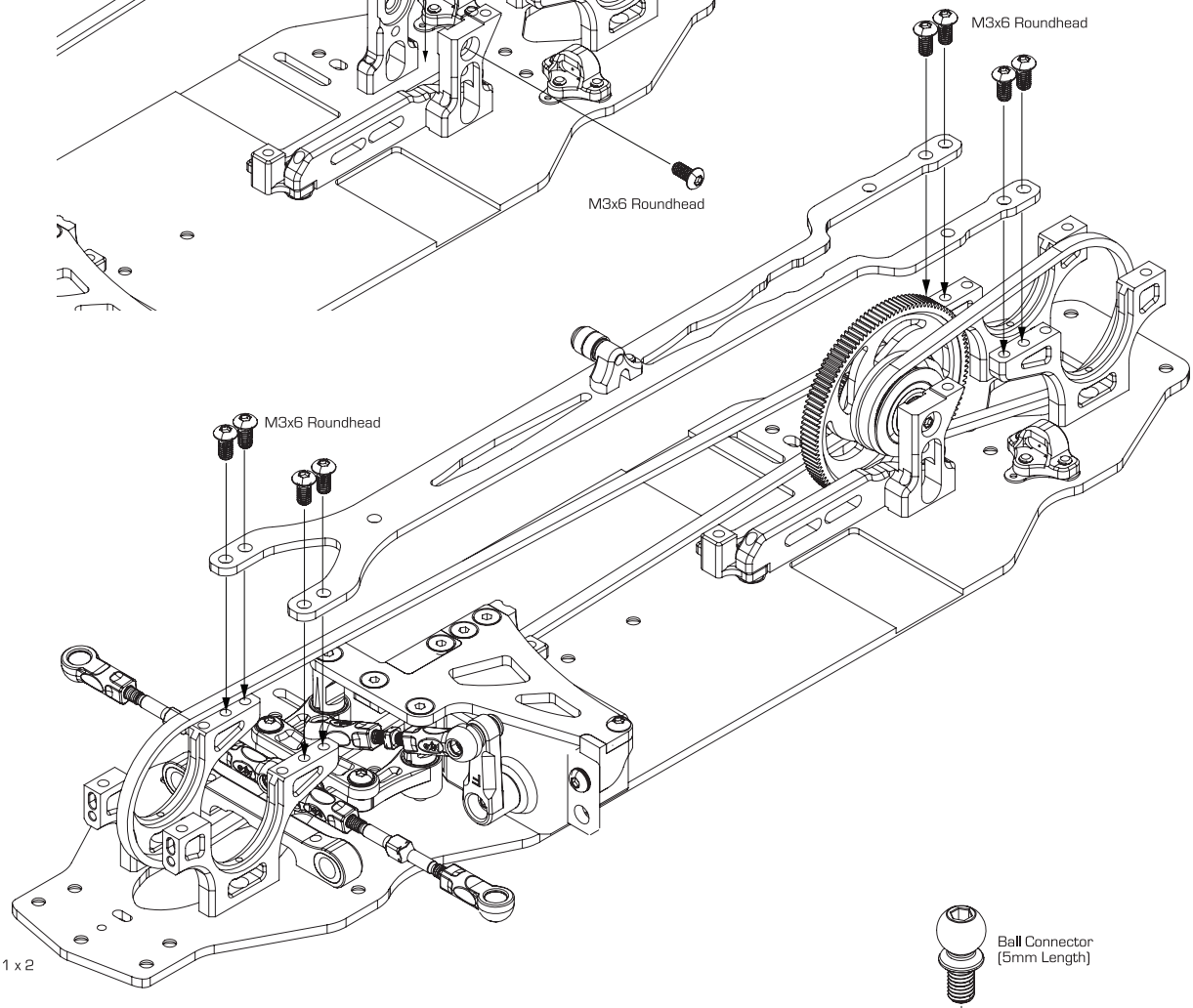

13

Rear Upper Bulkhead Assembly

Ball Connector (5mm Length) B-02-VBC-3021 x 2

T2 7075 Spacer (Red) B-02-P30890 x 2

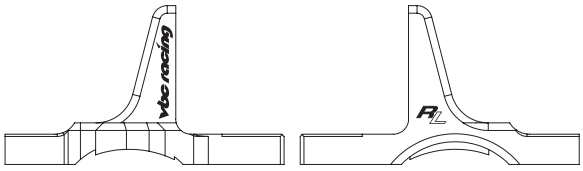

WildFireD09 Upper Rear Bulkhead RL B-02-P31246 x 1

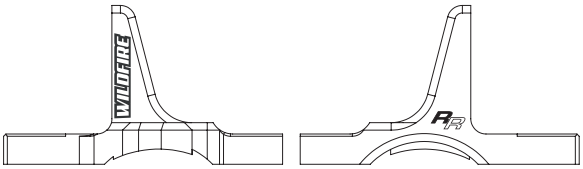

WildFireD09 Upper Rear Bulkhead RR B-02-P31247 x 1

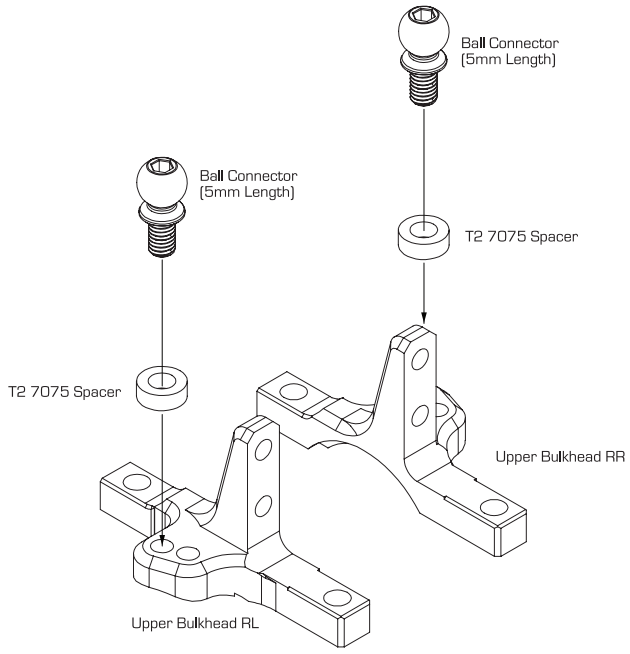

© VBC Racing WILDFIRE D09

14

Install Rear Drivetrain

M3x8 Roundhead C-02-SC-R0308 x 4

M2x4 Roundhead C-02-SC-R0204 x 2

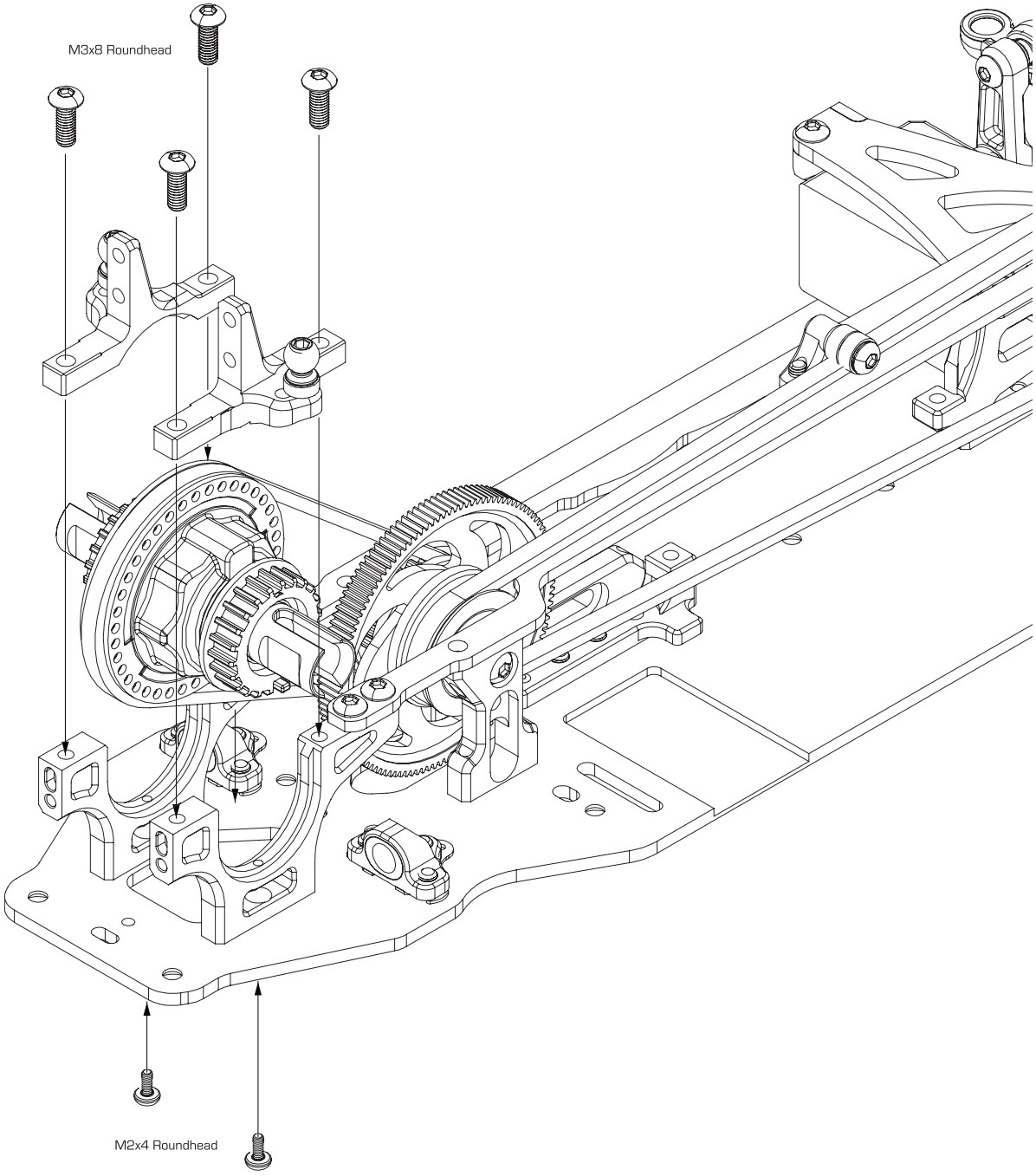

TIP Rear Belt Tension Adjustment

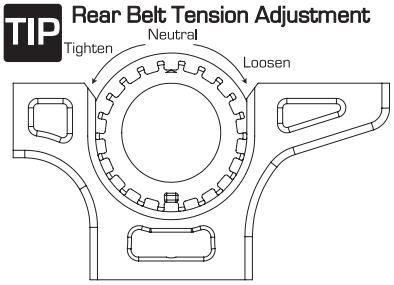

High Diff Position

* Less Traction
* Provides more On Power Steering
* Recommeded For Medium - High Grip Tracks

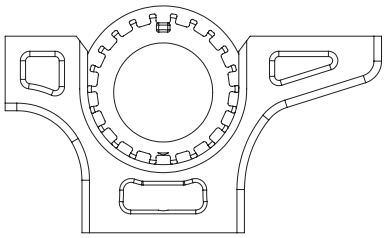

Low Diff Position

* More Traction
* Provides More On Power Traction
* Recommeded For Low Grip Tracks

© VBC Racing WILDFIRE D09

15

Front Drive Train Assembly - Spool Assembly

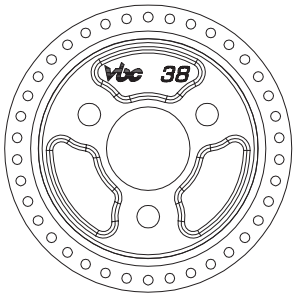

Front Spool 38T A-03-VBC-0021 x 1

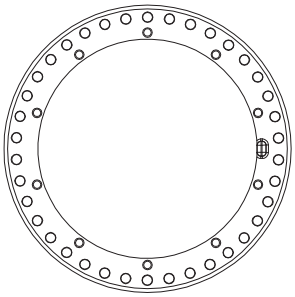

Pulley Belt Guide A-03-VBC-0022 x 1

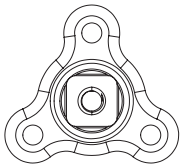

7075 Aluminium Lightweight Spool Shaft B-02-G30391

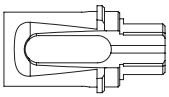

Lightweight Hardened Spool Outdrive A-03-VBC-0166 x 2

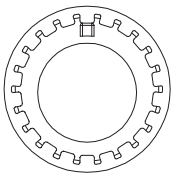

Belt Tension Adjuster Ring A-03-VBC-0047x 2

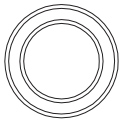

10x15 Ball Bearing C-02-BB-1510-P x 2

M3x12 Flathead C-02-SC-F0312 x 2

M3x6 Roundhead C-02-SC-R0306 x 3

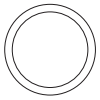

10mm x 12mm x 0.3mm Spacer C-02-P30914 x 1

OPTION PARTS

Front Spool Outdrive A-03-VBC-0055 x 2

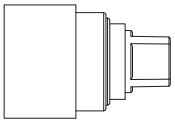

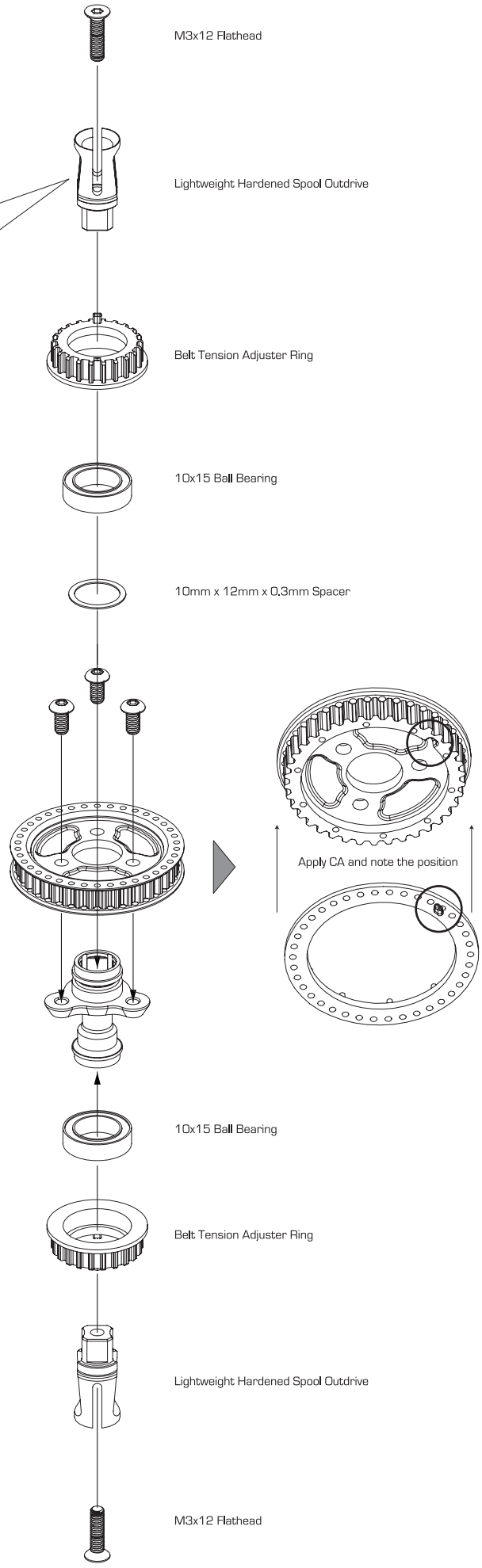

© VBC Racing WILDFIRE D09

16

Assemble Front Upper Bulkhead

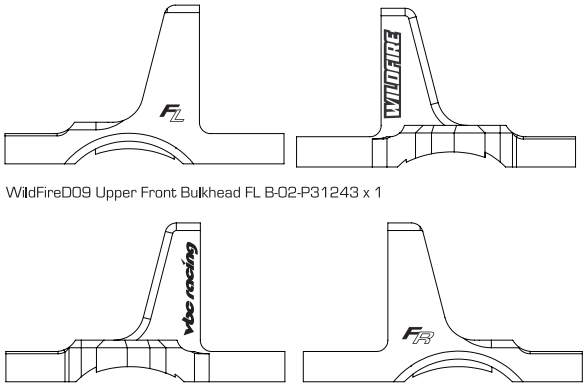

WildFireD09 Upper Front Bulkhead FL B-02-P31243 x 1

WildFireD09 Upper Front Bulkhead FR B-02-P31244 x 1

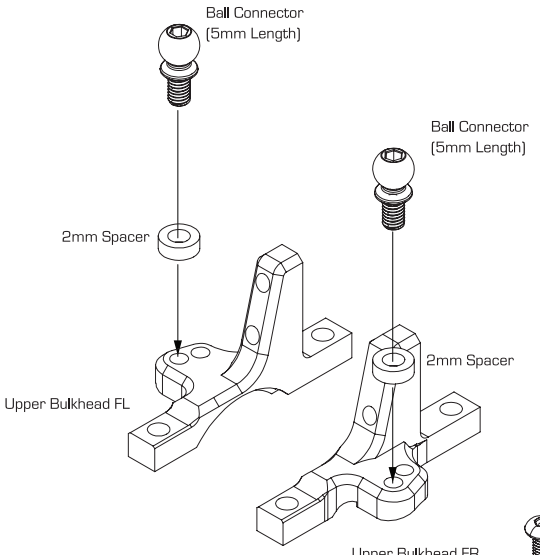

17

Install Front Drivetrain

Ball Connector (5mm Length)
B-02-VBC-3021 x 2

T2 7075 Spacer (Red) B-02-P30890 x 2

M3x8 Roundhead C-02-SC-R0308 x 4

M2x4 Roundhead C-02-SC-R0204 x 2

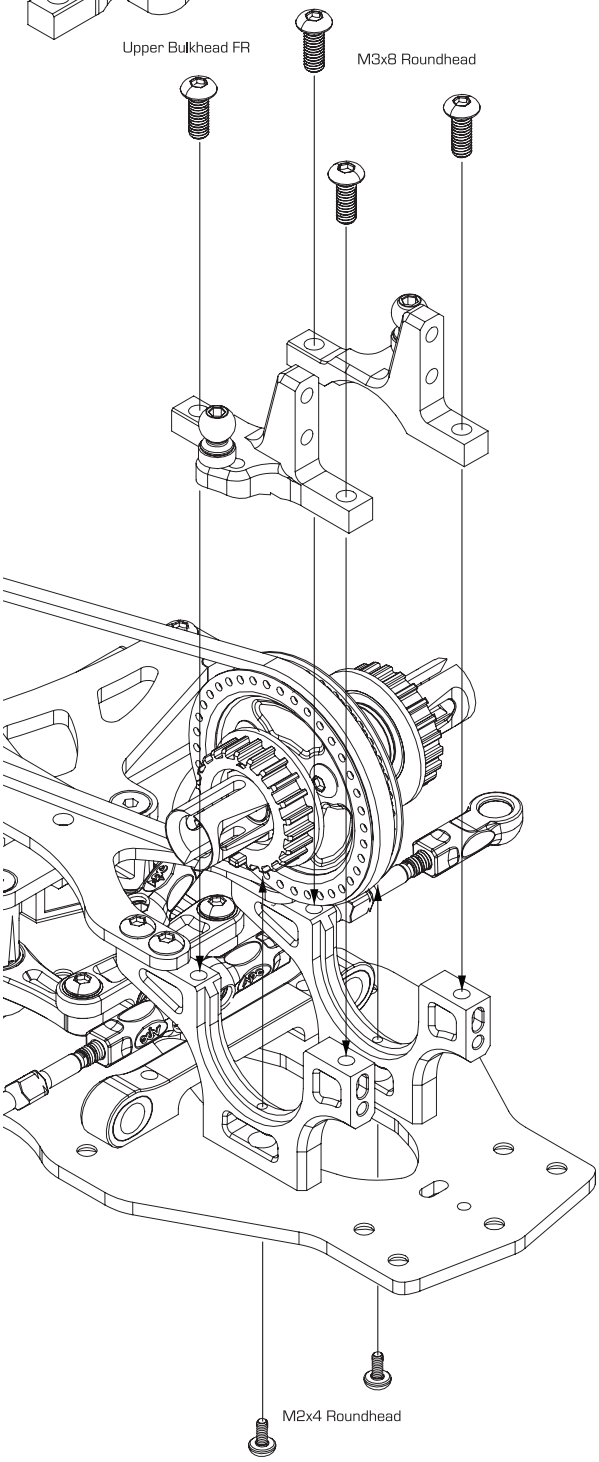

TIP Front Belt Tension Adjustment

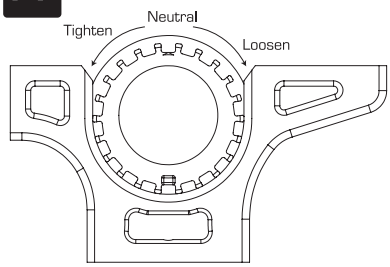

High Diff Position

*Less Traction
*Provides more Steering
*Recommeded For Medium - High Grip Tracks

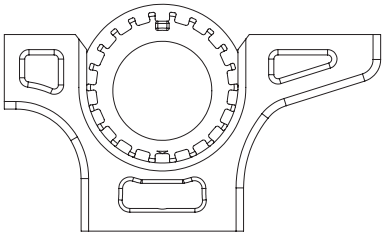

Low Diff Position

*More Traction
*Provides More On Power Traction
*Recommeded For Low Grip Tracks

© VBC Racing WILDFIRE D09

18

Rear Suspension Arm Assembly

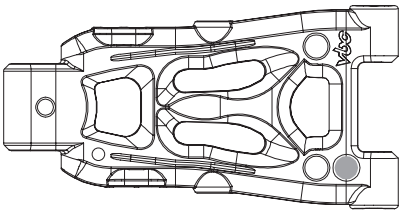

R Suspension Arm Composite X Sliver A-03-P30896

T2 7075 Spacer (Red) B-02-P30890 x 2

T1 7075 Spacer (Red) B-02-P30891 x 4

Suspension Arm Pin B-02-VBC-0029 x 2

Arm Pin Pivot Ball B-02-VBC-0035 x 2

Ball Connector B-02-VBC-3021 x 2

Ball Connector B-02-VBC-0045 x 2

M3x10 Set Screw C-02-SC-SS-0310 x 2

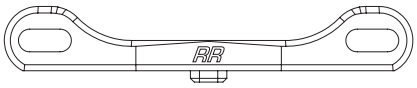

Suspension Mount RR B-02-P31317 x 1

M4x10 Set Screw C-02-SC-SS-0410 x 2

M3x6 Flat Head Screw C-02-SC-F0306 x 2

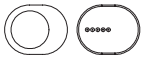

Suspension Mount Composite Insert 5 A-03-P30949 x 2

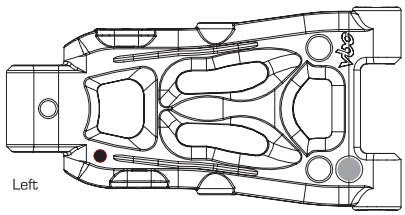

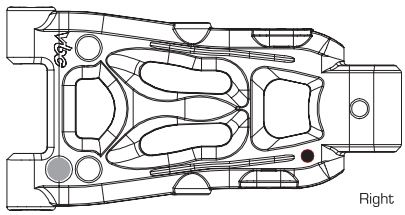

Make sure the black markings are in the same direction on the left and right suspension arms

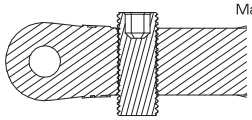

Insert M4x10 Set Screw from the top of the suspension arm for adjusting down stop. Initial setting is 1.8mm measuring from the bottom part of the arm for both sides.

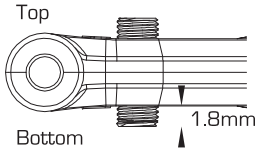

TIP Suspension Arm Composite Compound Chart

Silver	Gold	Red
A-03-G30896	A-03-P30930	A-03-G31300
Medium	Hard	Ultra-Hard

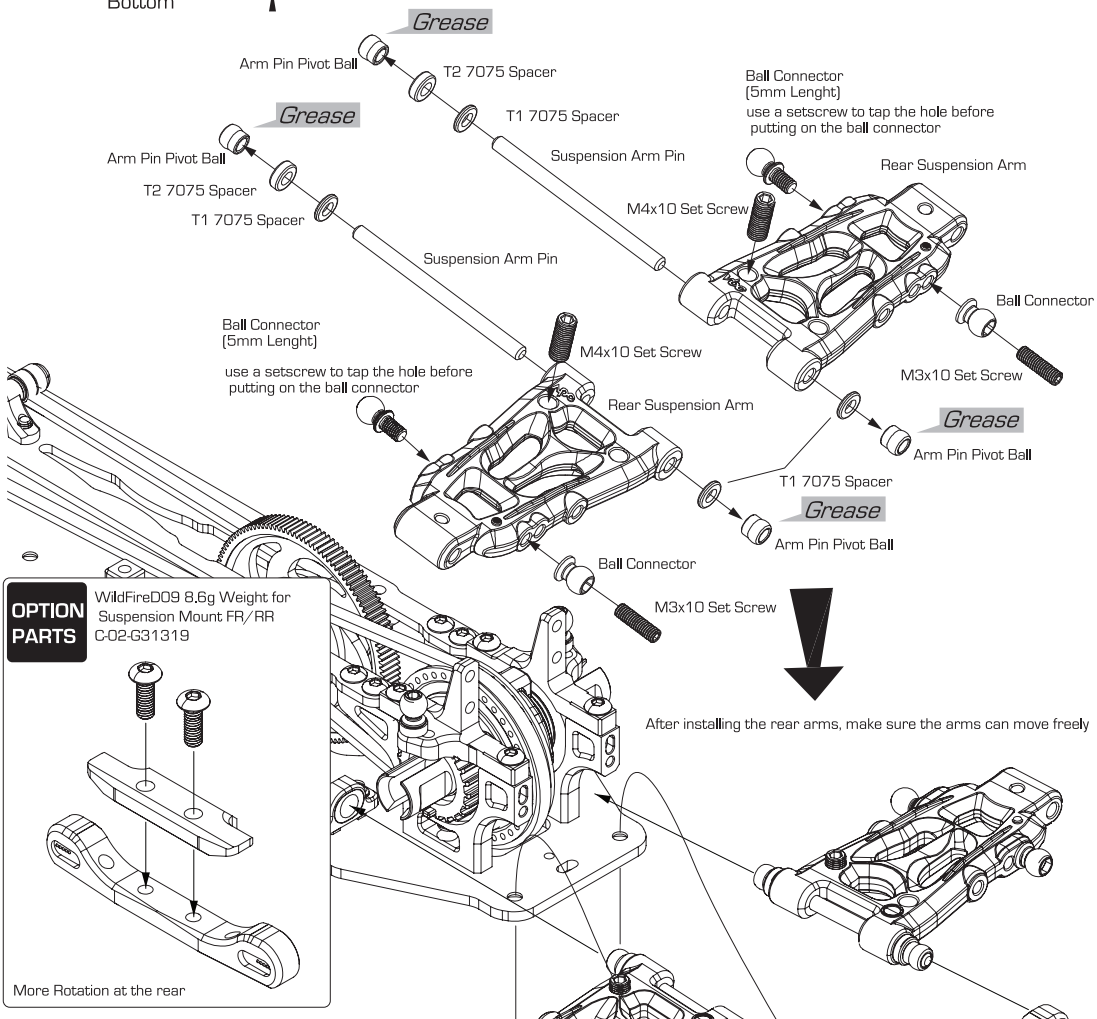

After installing the rear arms, make sure the arms can move freely

OPTION PARTS WildFireD09 8.6g Weight for Suspension Mount FR/RR C-02-G31319

More Rotation at the rear

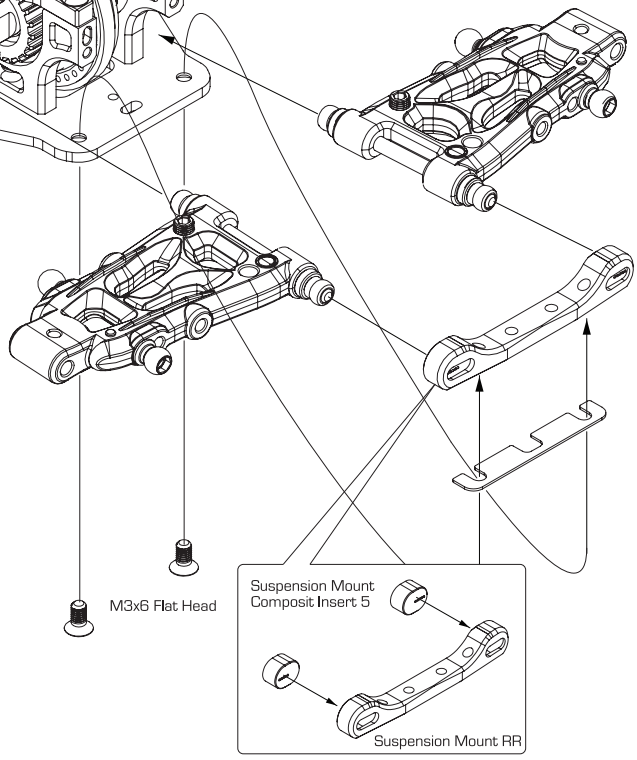

TIP Suspension Mount Insert Chart

Composite Insert			Narrow	RF (Spilt Mount)							Wide
			5	4	3	2	1	2	3	4	5
Narrow	RR (Suspension Mount)	5	2	1.75	1.5	1.25	1	0.75	0.5	0.25	0
		4	2.25	2	1.75	1.5	1.25	1	0.75	0.5	0.25
		3	2.5	2.25	2	1.75	1.5	1.25	1	0.75	0.5
		2	2.75	2.5	2.25	2	1.75	1.5	1.25	1	0.75
		1	3	2.75	2.5	2.25	2	1.75	1.5	1.25	1
		2	3.25	3	2.75	2.5	2.25	2	1.75	1.5	1.25
Wide		3	3.5	3.25	3	2.75	2.5	2.25	2	1.75	1.5
		4	3.75	3.5	3.25	3	2.75	2.5	2.25	2	1.75
		5	4	3.75	3.5	3.25	3	2.75	2.5	2.25	2

Original Setup

© VBC Racing WILDFIRE D09

19

Rear Suspension Arm Assembly Part2

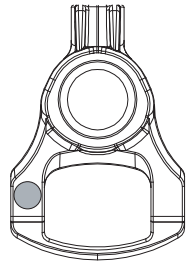

R 2-hole Upright Composite X Sliver A-03-P31327 x 2

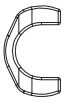

Shaft End Shoe A-03-VBC-0038 x 2

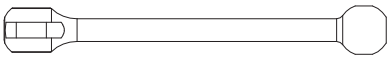

7075-T6 Rear Inner Axle (49mm) B-02-VBC-0104 x 2

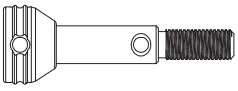

Wheel Axle B-02-VBC-0025 x 2

Axle Joint B-02-VBC-0026 x 2

Axle Lock Spring B-02-VBC-0027 x 2

5x10mm Ball Bearings
C-02-BB-1005-P x 4

M2x12 Shaft Pin B-02-VBC-3035 x 2

M2x10 Shaft Pin B-02-VBC-0020 x 4

M3x10 Set Screw C-02-SC-SS-0310 x 2

M3x2 Set Screw C-02-SC-SS-0302 x 2

Lightweight 0 Offset Hex Wheel Hub B-02-P30887 x 2

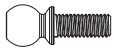

Ball Connetor (7.5mm Lenght)
B-02-VBC-3022 x 2

T2 7075 Spacer (Red) B-02-P30890 x 2

M3x3 Set Screw C-02-SC-SS-0303

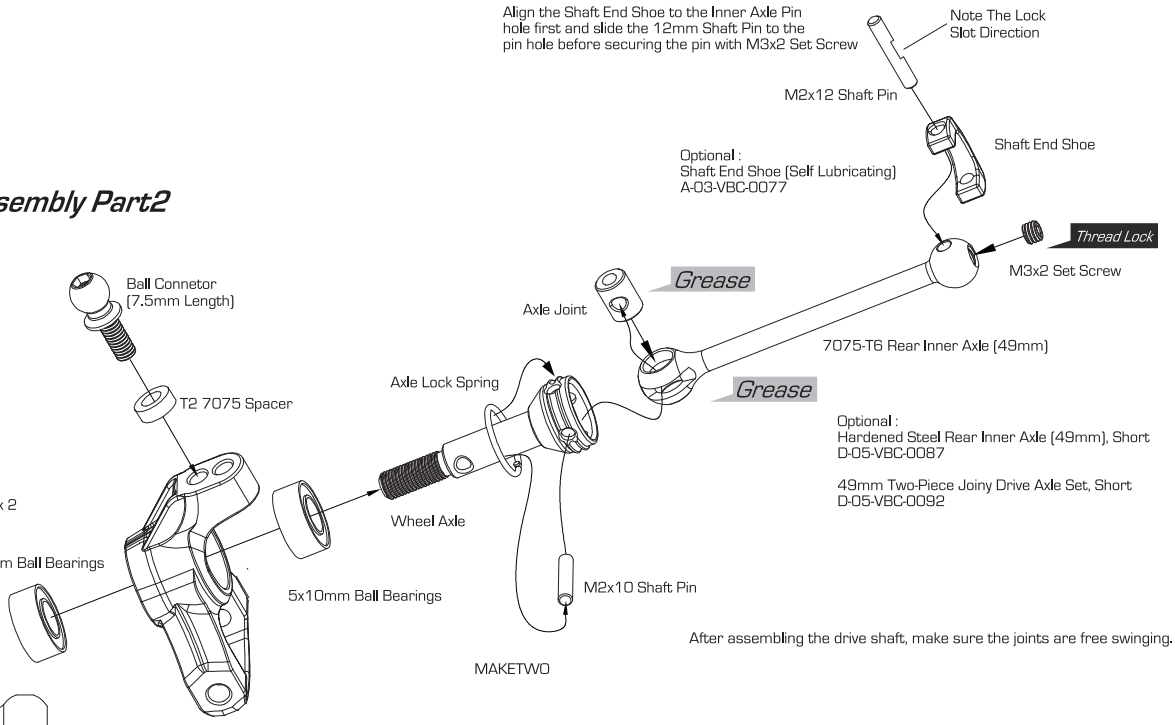

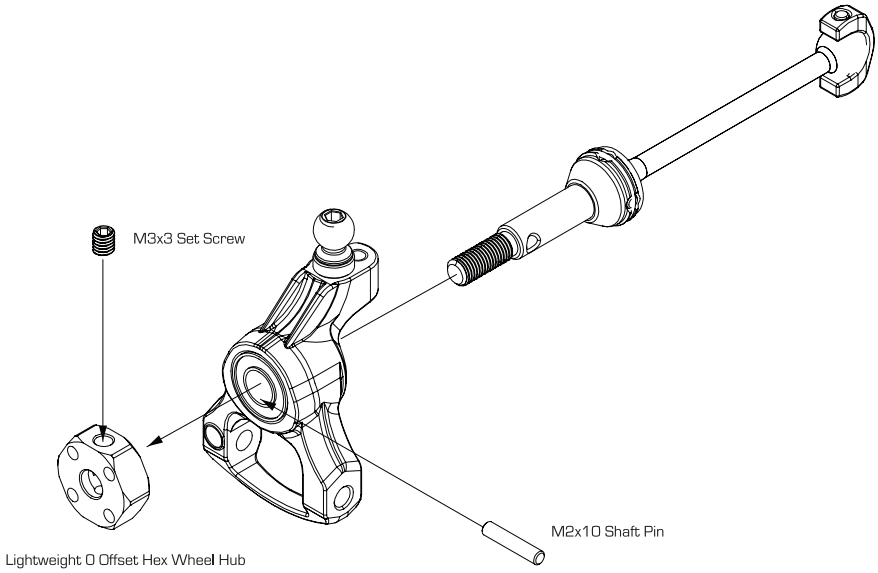

© VBC Racing WILDFIRE D09

20

Rear Suspension Arm Assembly Part 3

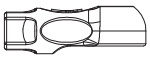
Turnbuckle Cup A-03-VBC-0039 x 4

M3x32mm Turnbuckle B-02-VBC-0036 x 2

M3x23 Upright Pin B-02-VBC-0032 x 2

3x5x0.2mm Shim B-02-VBC-0100 x 4

M3x4 Set Screw C-02-SC-SS-0304 x 2

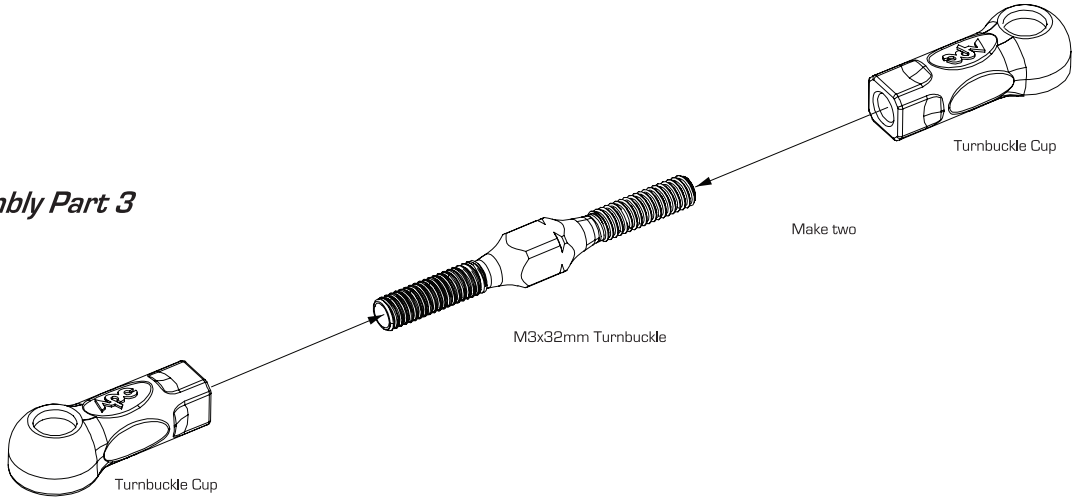

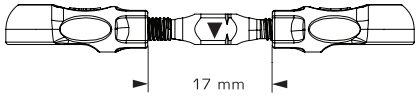

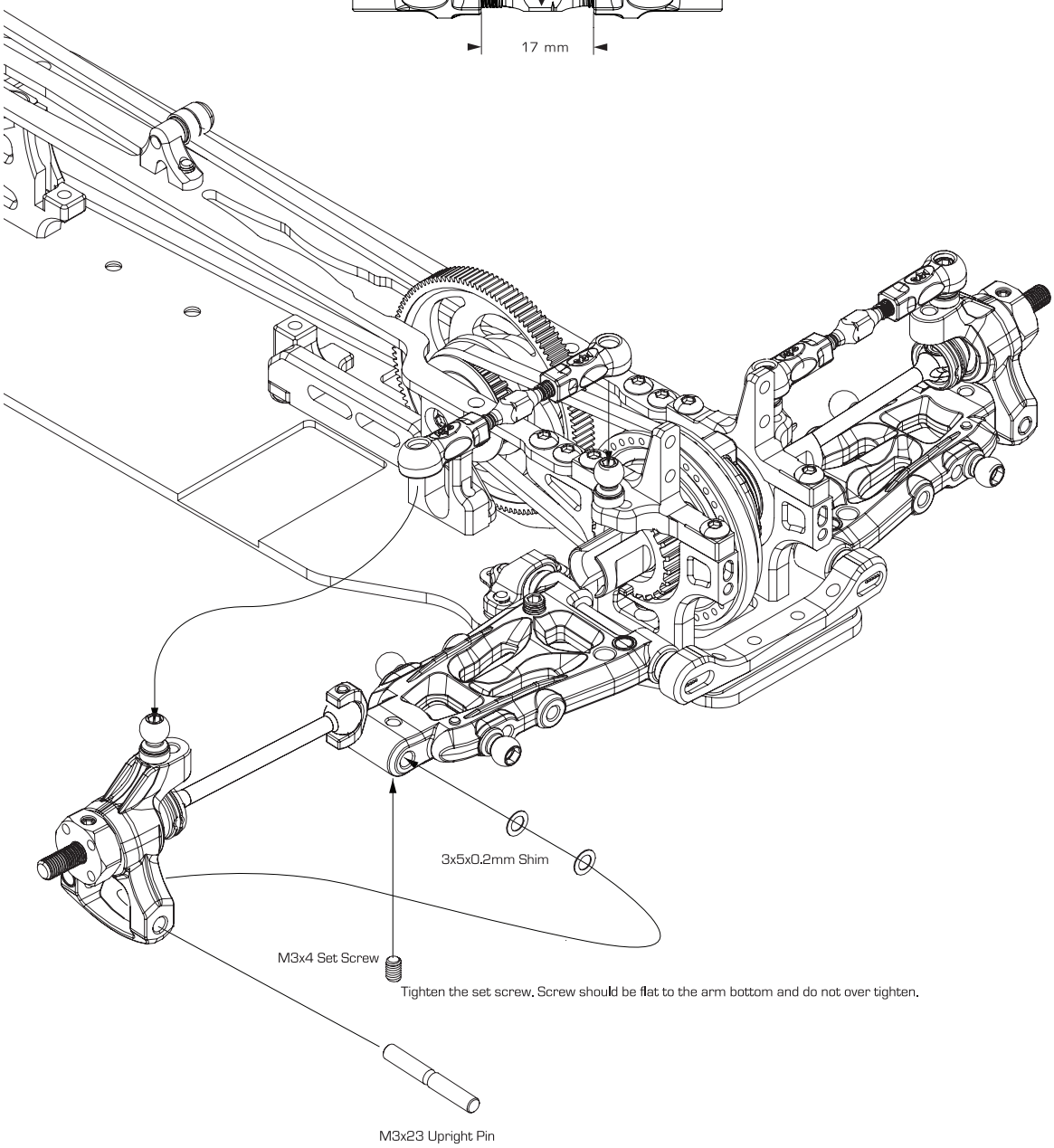

© VBC Racing WILDFIRE D09

21

Front Suspension Assembly Part 1

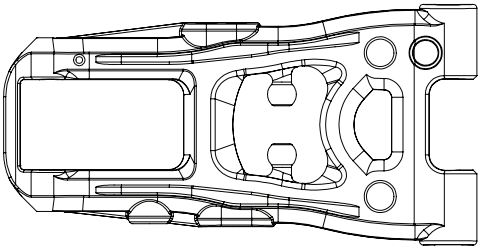

F Suspension Arm Composite X Sliver A-03-P30899

Front Suspension Arms top view

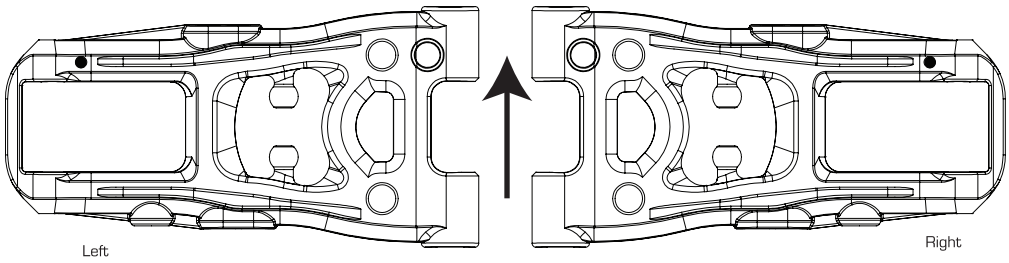

Make sure the black markings are in the same direction on the left and right suspension arms

TIP **Suspension Arm Composite Compound Chart**

F Suspension Arm Composite X Sliver A-03-P30899	F Suspension Arm Composite X Gold A-03-P30929	F Suspension Arm Composite X Red A-03-G31299
Medium	Hard	Ultra Hard

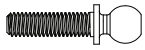

4.7x17mm Ballstud A-02-VBC-5092 x 2

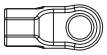

Turnbuckle Cup Open Type S A-03-VBC-0040 x 2

Suspension Arm Spacer T2 A-03-VBC-0052 x 2

Suspension Arm Spacer T1 A-03-VBC-0051 x 4

Suspension Arm Pin B-02-VBC-0029 x 2

Ball Connector B-02-VBC-0045 x 4

Arm Pin Pivot Ball B-02-VBC-0035 x 4

M4x10 Set Screw C-02-SC-SS-0410 x 2

M3x10 Set Screw C-02-SC-SS-0310 x 2

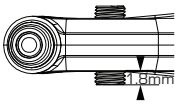

Insert M4x10 Set Screw from the top of the suspension arm for adjusting down stop. Initial setting is 1.8mm measuring from the bottom part of the arm for both sides.

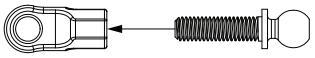

Ball Connector Open Type S 4.7x17mm Ballstud

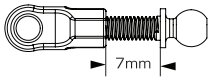

Make 2 sets

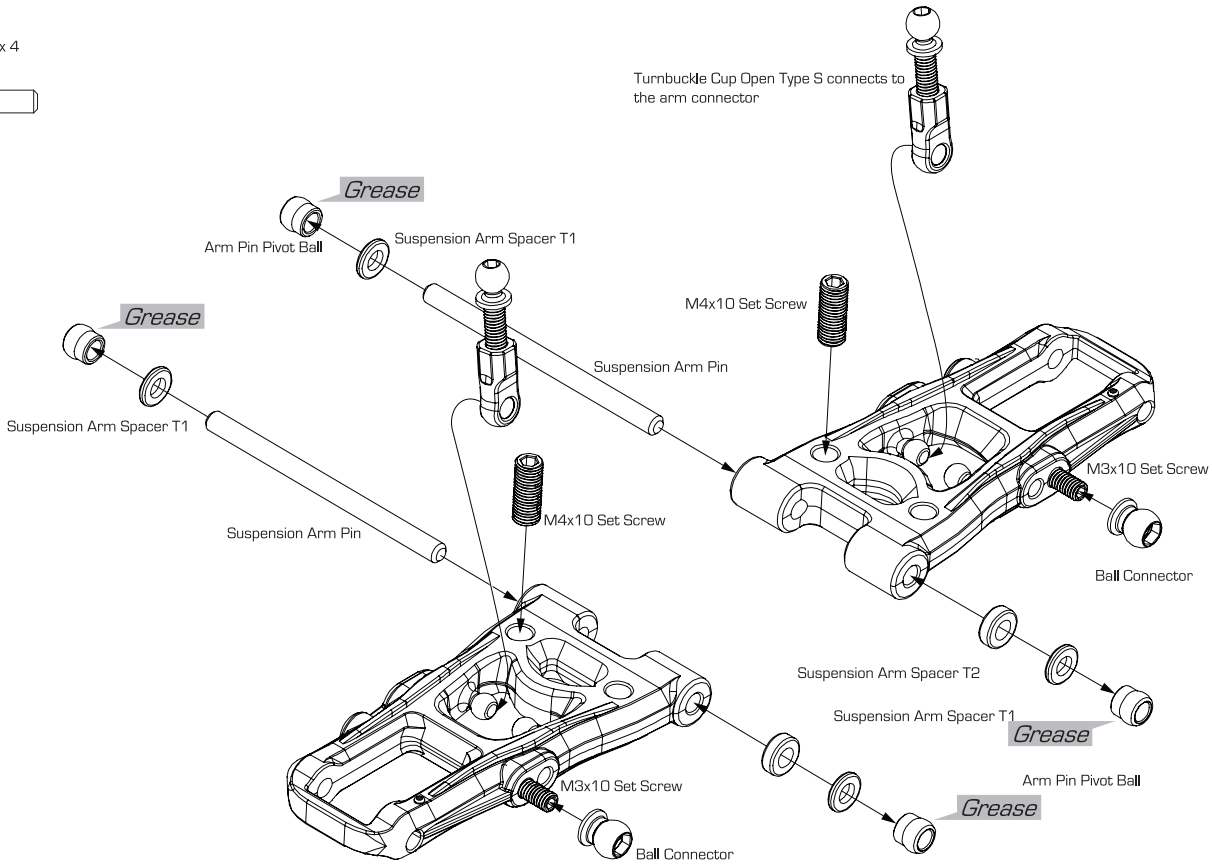

© VBC Racing WILDFIRE D09

22

Front Suspension Assembly Part 2

Suspension Mount FF B-02-P31316 x 1

M3x6 Flat Head Screw C-02-SC-F0306 x 2

Suspension Mount Composite Insert 1 A03P30945 X 2

TIP Suspension Mount Insert Chart

Composite Insert			Narrow	FR (Spilt Mount)							Wide
			5	4	3	2	1	2	3	4	5
Narrow	FF (Suspension Mount)	5	0	0.25	0.5	0.75	1	1.25	1.5	1.75	2
		4	-0.25	0	0.25	0.5	0.75	1	1.25	1.5	1.75
		3	-0.5	-0.25	0	0.25	0.5	0.75	1	1.25	1.5
		2	-0.75	-0.5	-0.25	0	0.25	0.5	0.75	1	1.25
		1	-1	-0.75	-0.5	-0.25	0	0.25	0.5	0.75	1
		2	-1.25	-1	-0.75	-0.5	-0.25	0	0.25	0.5	0.75
Wide		3	-1.5	-1.25	-1	-0.75	-0.5	-0.25	0	0.25	0.5
		4	-1.75	-1.5	-1.25	-1	-0.75	-0.5	-0.25	0	0.25
		5	-2	-1.75	-1.5	-1.25	-1	-0.75	-0.5	-0.25	0

Suspension Mount Composite Insert 1

Suspension Mount FF B-02-P31316 x 1

M3x6 Flat Head Screw

OPTION PARTS WildFireD09 8.6g Weight for Suspension Mount FR/RR C-02-G31319

Less Front Steering Response

OPTION PARTS Front/Rear Suspenion Shim (1mm,0.5mm) D-05-VBC-0232

© VBC Racing WILDFIRE D09

23

Front Suspension Assembly Part 3

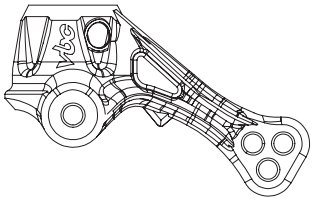

Steering Block Composite X Sliver A-03-P30898 x 2

Double Joint Bone for Xray,VBC 41.3mm
A-03-VBC-0069 x 2

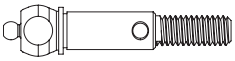

Double Joint Axle Shaft
C-02-P30944 x 2

Double Joint Inner
C-02-P30940 x 4

Double Joint Lock Spring Ring C-02-P30943 x 4

Double Joint Case
C-02-P30942 x 2

Double Joint Pin 1.58 x 8.98 C-02-P30941x 4

5x10x3mm Ball Bearing C-02-BB-1053-B x 2

5x10x4mm Ball Bearing C-02-BB-1005-P x 2

M2x10 Shaft Pin B-02-VBC-3035 x 2

M3x2 Set Screw C-02-SC-SS-0302 x 2

Lightweight 0 Offset Hex Wheel Hub B-02-P30887 x 2

M3x3 Set Screw C-02-SC-SS-0303

Ball Connector (5mm Length)
B-02-VBC-0021 x 2

M2x10 Shaft Pin B-02-VBC-0020 x 2

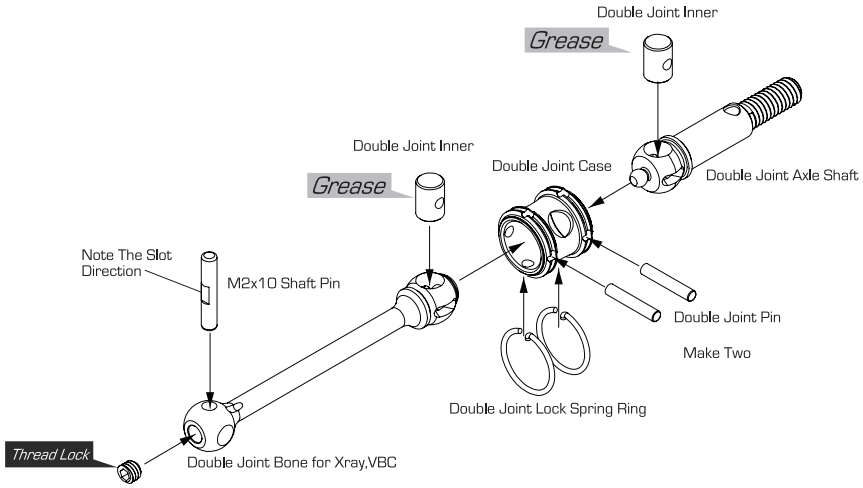

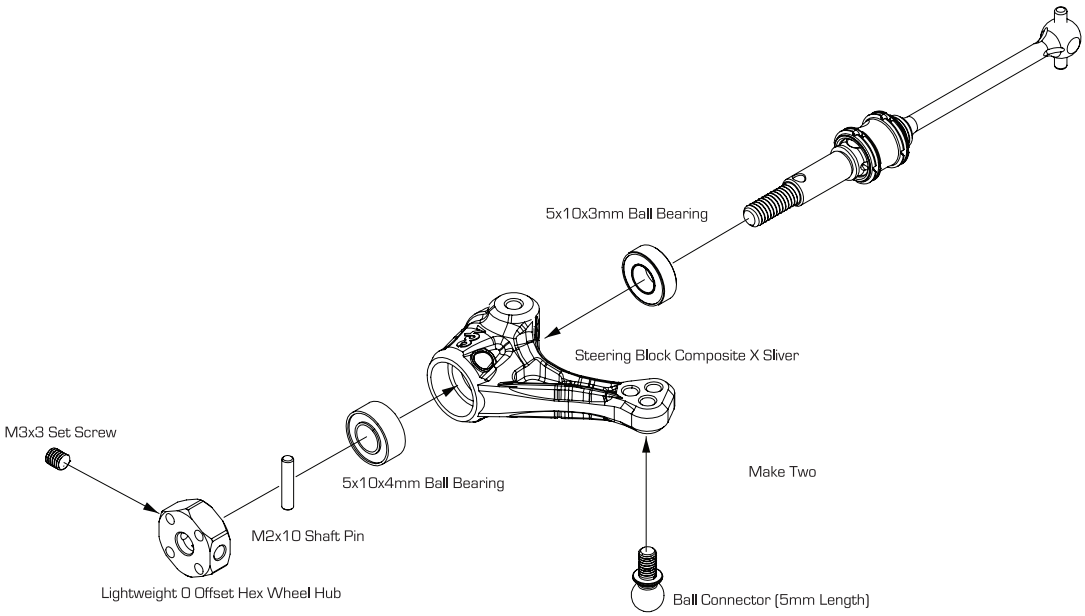

TIP **Steering Block Composite Compound Chart**

Steering Block Composite X Sliver
A-03-P30898

Steering Block Composite X Gold
A-03-P30926 x 2

Hard

Ultra-Hard

© VBC Racing WILDFIRE D09

24

Front Suspension Assembly Part 4

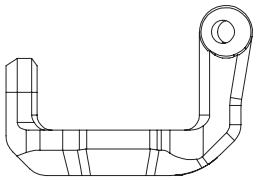

R C-Hub Composite X Sliver A-03-P30900 x 1

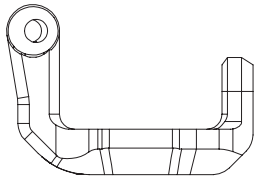

Left C-Hub Composite X Sliver A-03-P30901 x 1

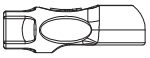

Turnbuckle Cup A-03-VBC-0039 x 2

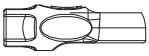

Turnbuckle Cup S A-03-VBC-0056 x 2

Ball Connector B-02-VBC-0045 x 2

M3x32mm Turnbuckle B-02-VBC-0036 x 2

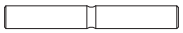

3x23 Upright Pin B-02-VBC-0032 x 2

Steering Swivel Tube B-02-VBC-0033 x 4

M3x12 Set Screw C-02-SC-SS-0312 x 2

M3x4 Set Screw C-02-SC-SS-0304 x 2

M3x9 Round Head Screw C-02-SC-R0309 x 2

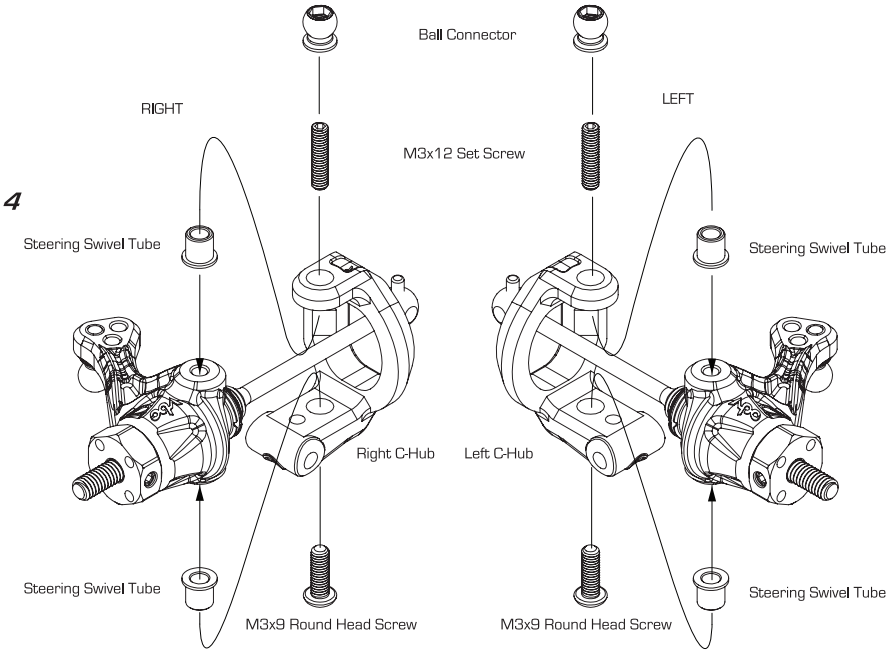

Please note the 'L'(Left) and 'R'(Right) markings on C-Hubs

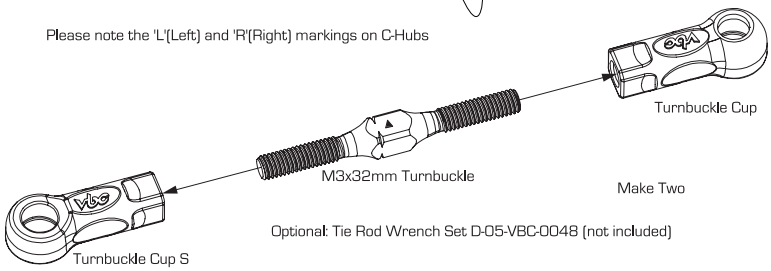

Optional: Tie Rod Wrench Set D-05-VBC-0048 (not included)

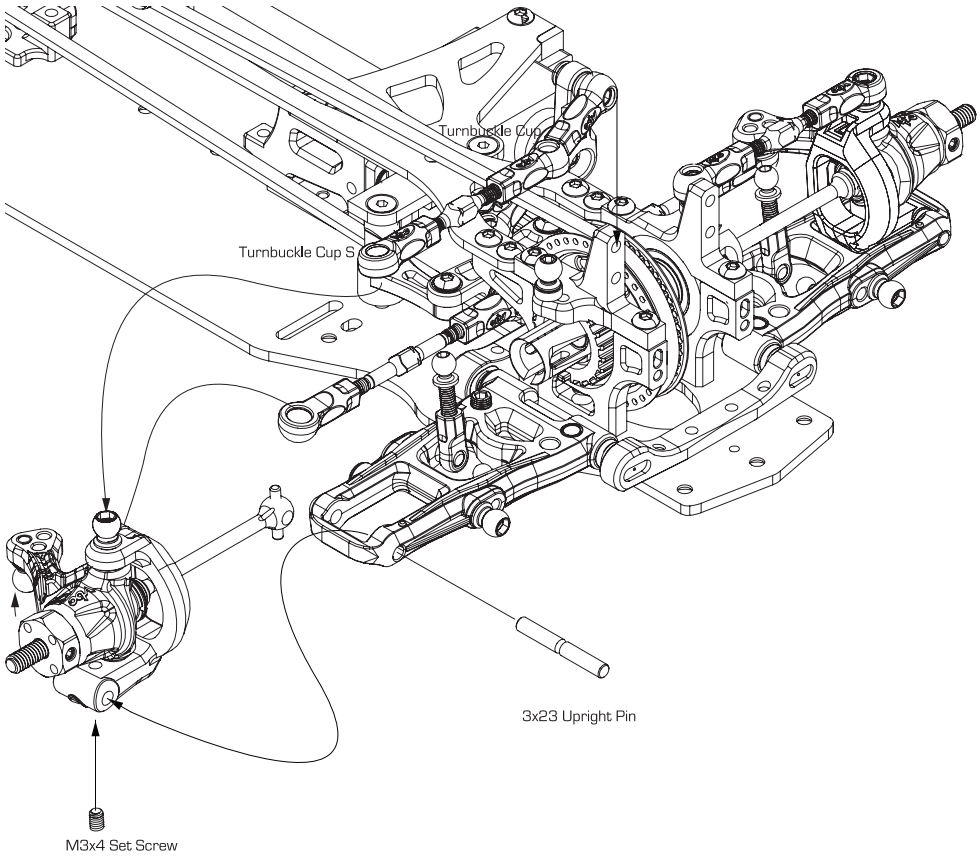

© VBC Racing WILDFIRE D09

25

Front and Rear Stabilizers

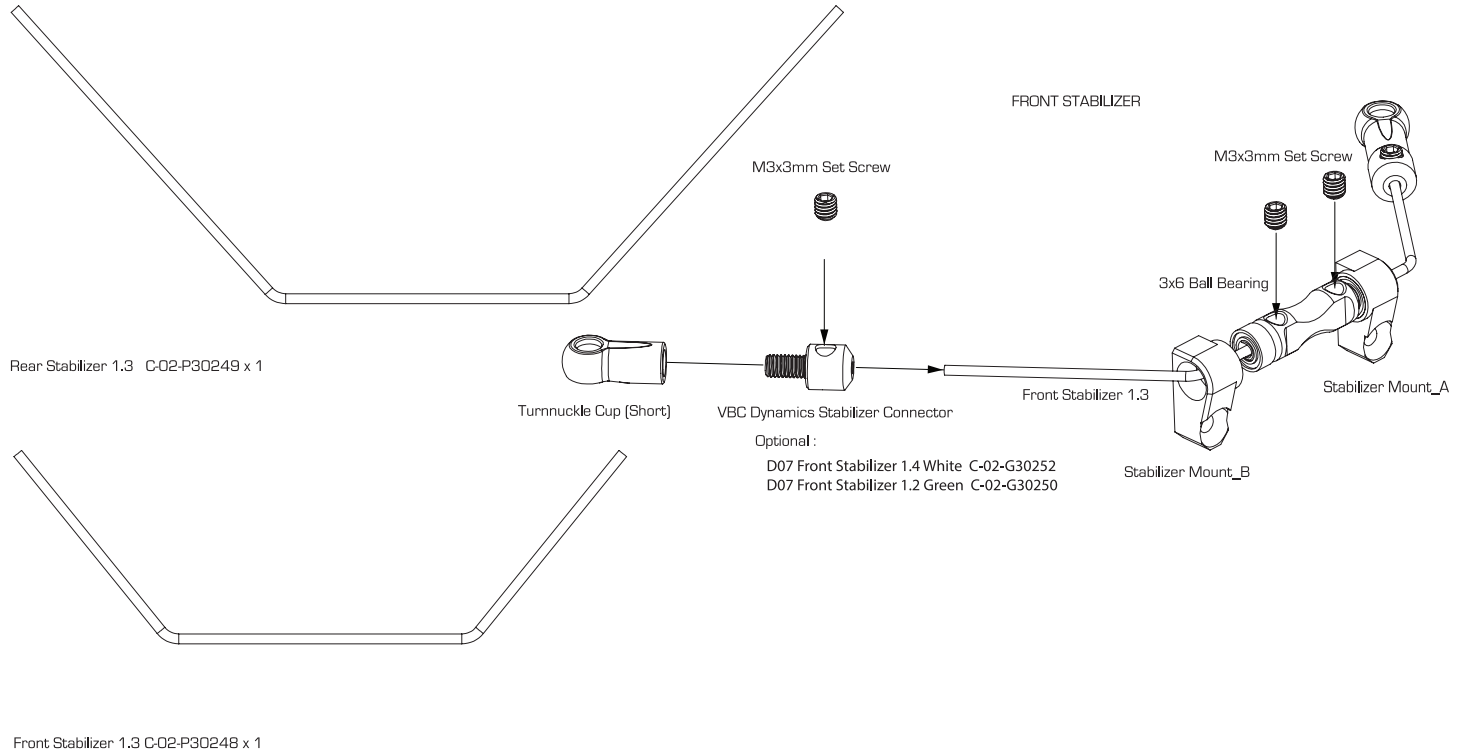

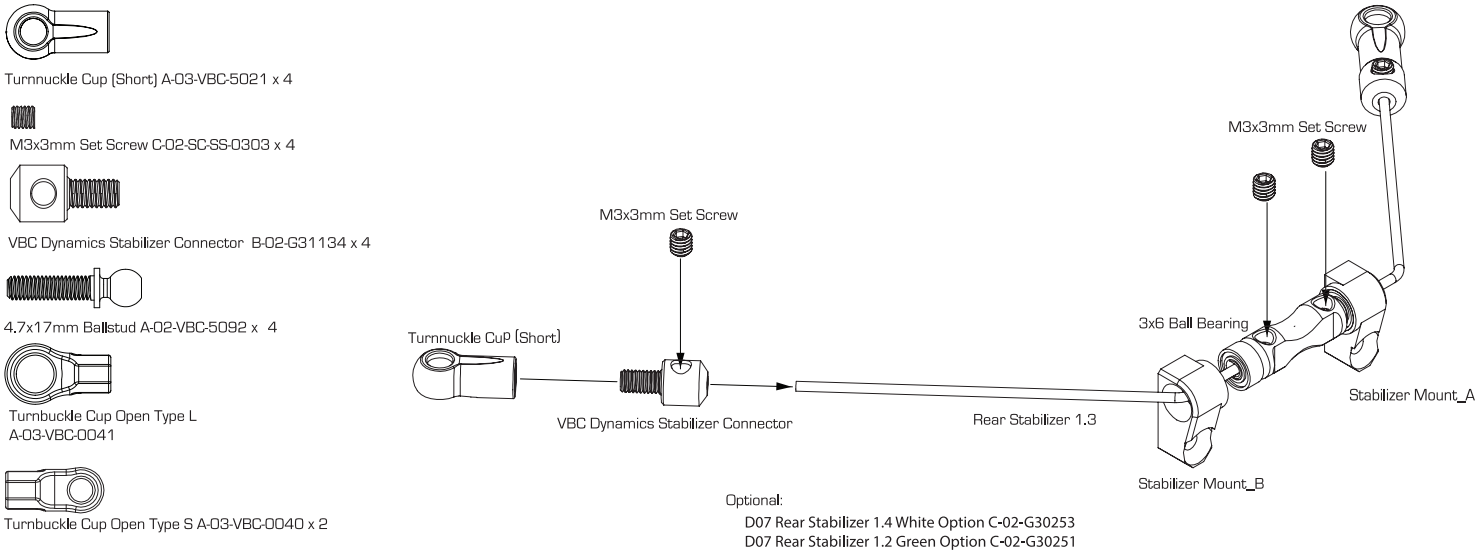

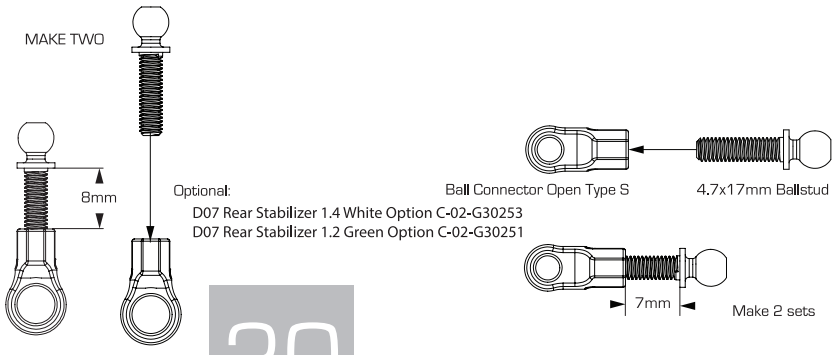

© VBC Racing WILDFIRE D09

26

Install Front and Rear Stabilizers

M2.5x8mm Flat Head Screw C-02-SC-F0258 x 4

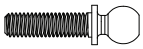

4.7x17mm Ballstud A-02-VBC-5092 x 2

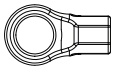

Turnbuckle Cup Open Type L
A-03-VBC-0041

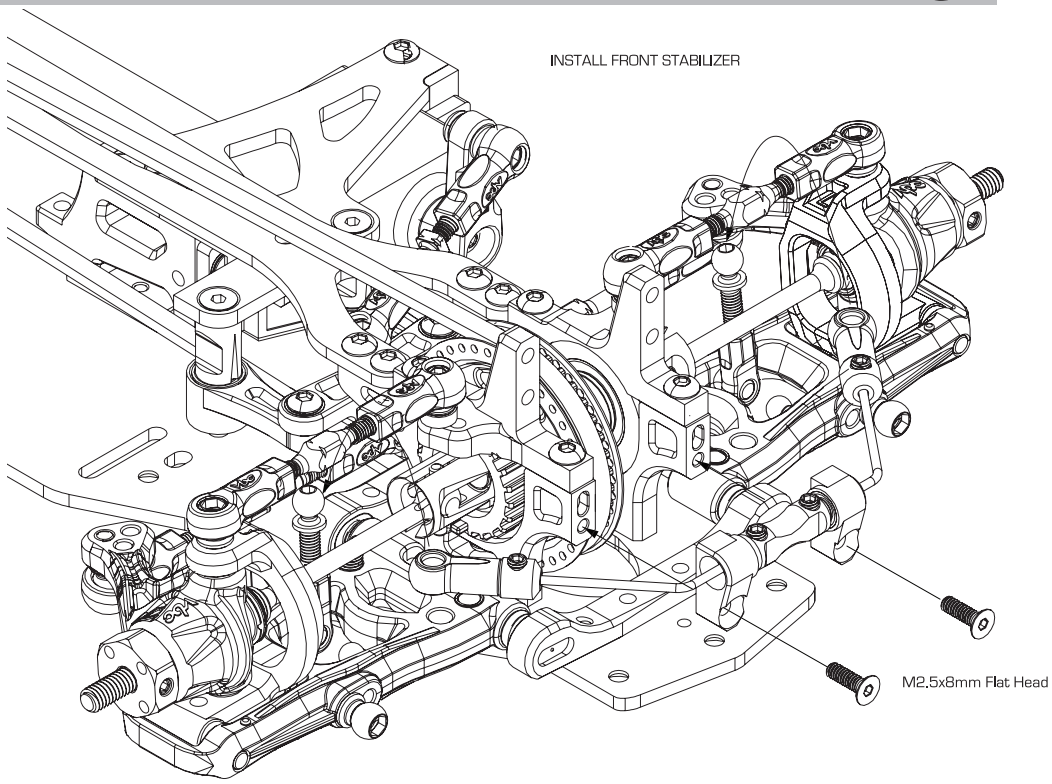

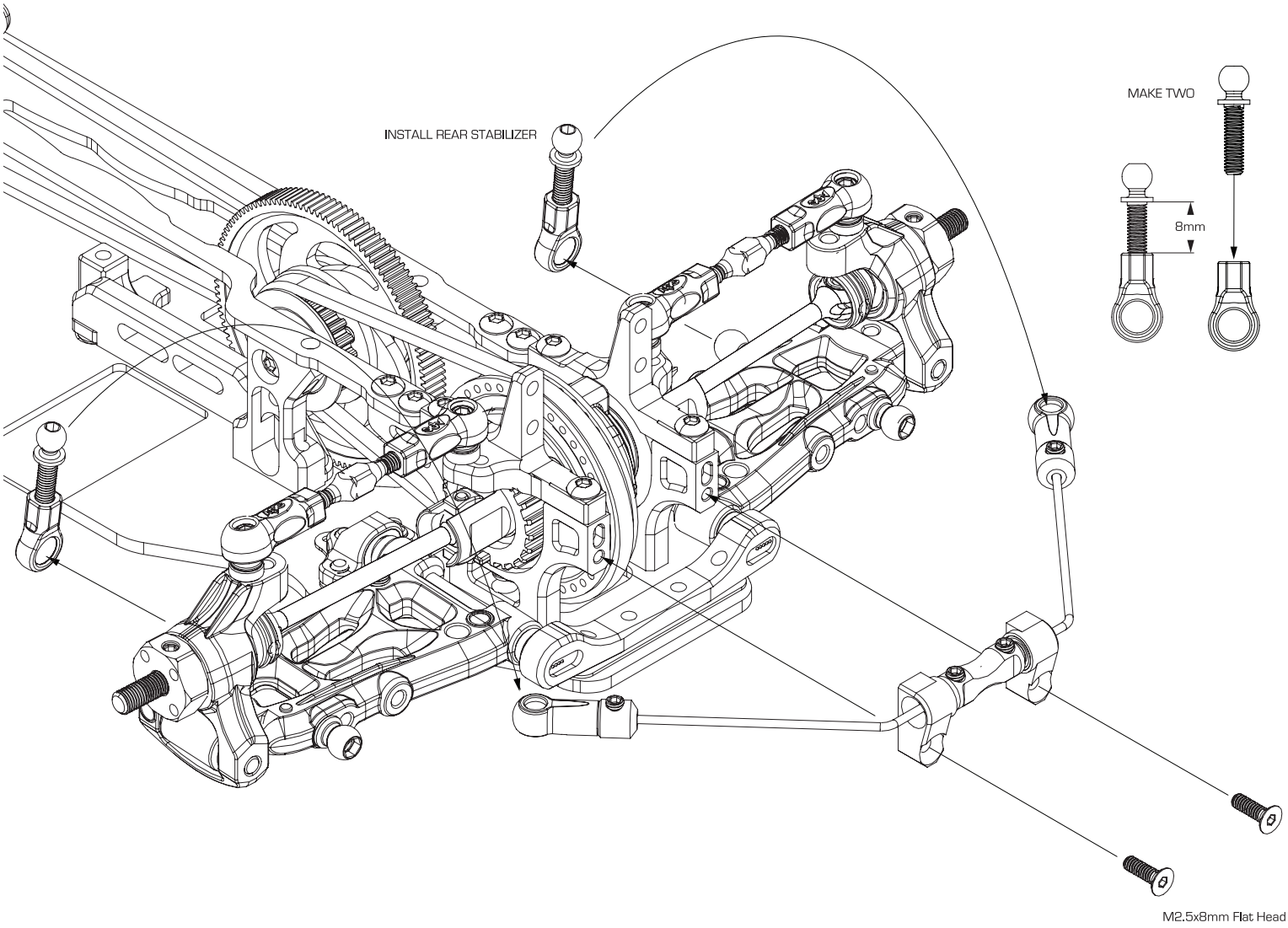

© VBC Racing WILDFIRE D09

27

Assemble Oil Shocks

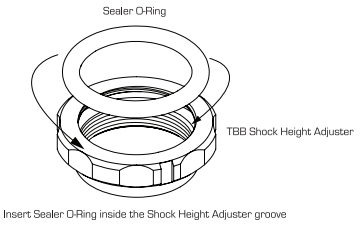

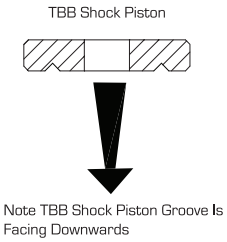

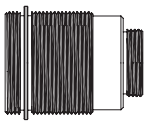
TBBS Shock Body B-02-G30955 x 4

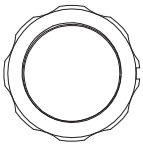
TBB Shock Height Adjuster B-02-VBC-0121 x 4

TBBS Shock Bottom Cap B-02-G30956 x 4

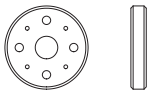
TBB Shock Piston (4 holes) A-03-VBC-0138 x 4

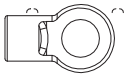
TBB Shock Bottom Connector A-03-VBC-0124 x 4

TBB Shaft Cap B-03-VBC-0125 x 4

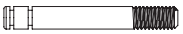
TBBS Shock Shaft C-02-G30957 x 4

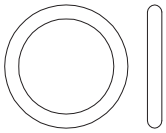
Sealer O-Ring (Shock Height Adjuster) B-03-VBC-0128 x 4

Shaft Sealer O-Ring B-03-VBC-0012 x 4

M2 E-Clip B-02-VBC-0129 x 8

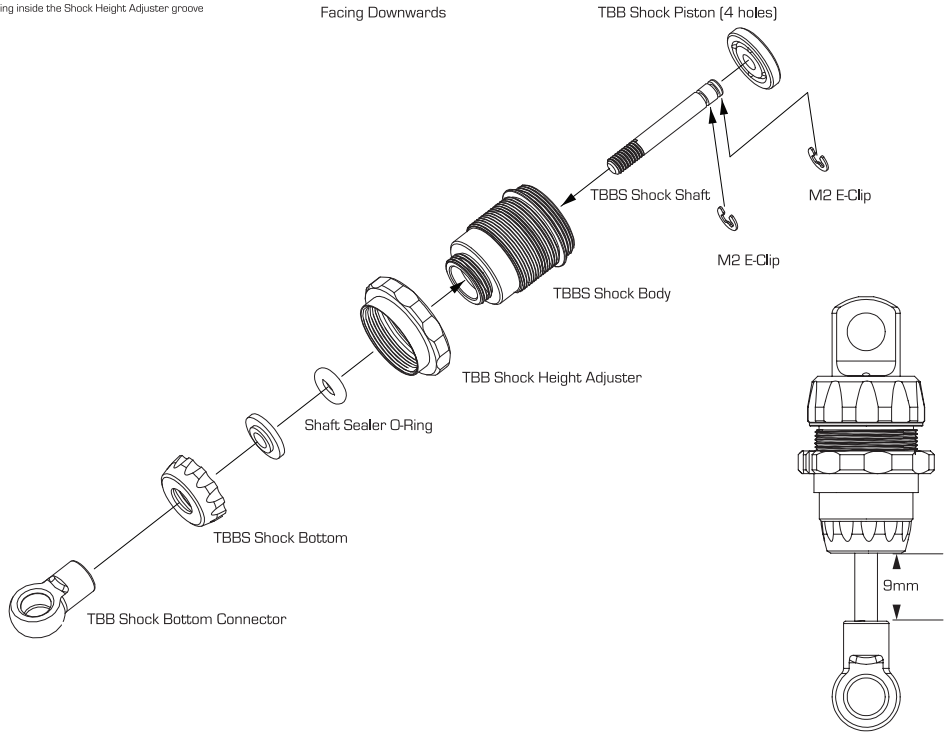

OPTION PARTS ***SMJ SILVER LINE SPRING***

N-01-G30991	SMJ Silver Line Spring TS2.8 (Short/Blue) for TBBS
N-01-G30992	SMJ Silver Line Spring TS3.0 (Short/Silver) for TBBS
N-01-G30993	SMJ Silver Line Spring TS3.2 (Short/Pink) for TBBS
N-01-G30994	SMJ Silver Line Spring TS3.5 (Short/Gold) for TBBS
N-01-G31272	SMJ Silver Line Progressive Spring TS2.5-2.7 (Short/Yellow) for TBBS
N-01-G31273	SMJ Silver Line Progressive Spring TS2.5-2.8 (Short/Red) for TBBS
N-01-G31274	SMJ Silver Line Progressive Spring TS2.5-3.0 (Short/Purple) for TBBS

© VBC Racing WILDFIRE D09

28

Assemble Oil Shocks Part 2

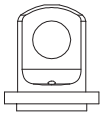

TBB Shock Top Connector A-03-VBC-0130 x 4

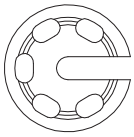

TBB Spring Bottom Support A-03-VBC-0131 x 4

TBB Oil Sealer Cap (Medium Soft)
B-03-VBC-0132 x 4

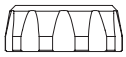

TBB Shock Body Cap B-02-VBC-0133 x 4

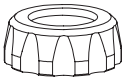

TBB Shock Body Cap

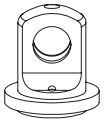

TBB Shock Top Connector

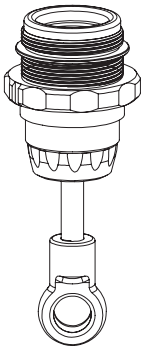

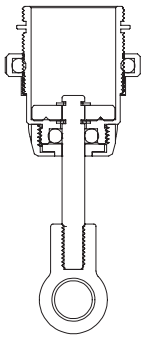

Fill supplied shock oil and remove air by moving the piston up and down until air bubbles disappears

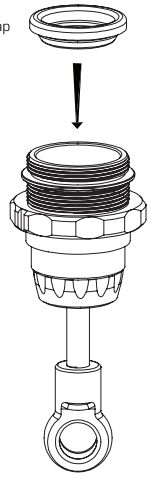

TBB Oil Sealer Cap

When placing Oil Sealer Cap make sure no bubbles are trap inside the shock body

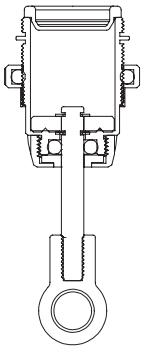

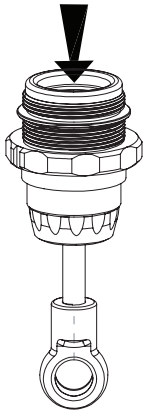

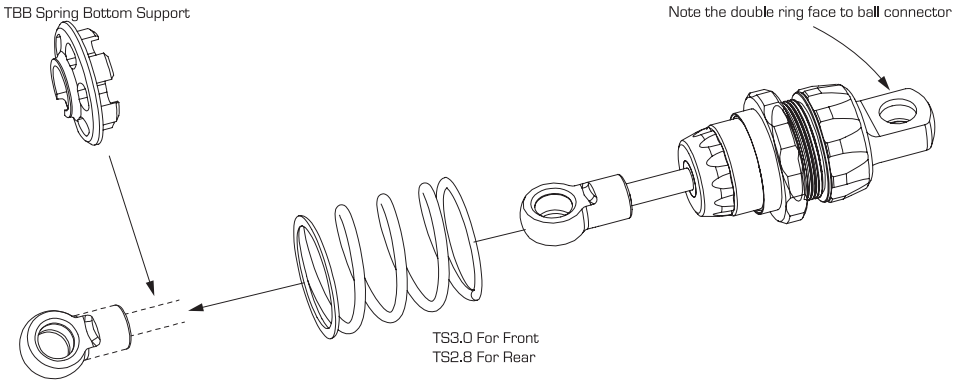

© VBC Racing WILDFIRE D09

29

Install Front Shocks

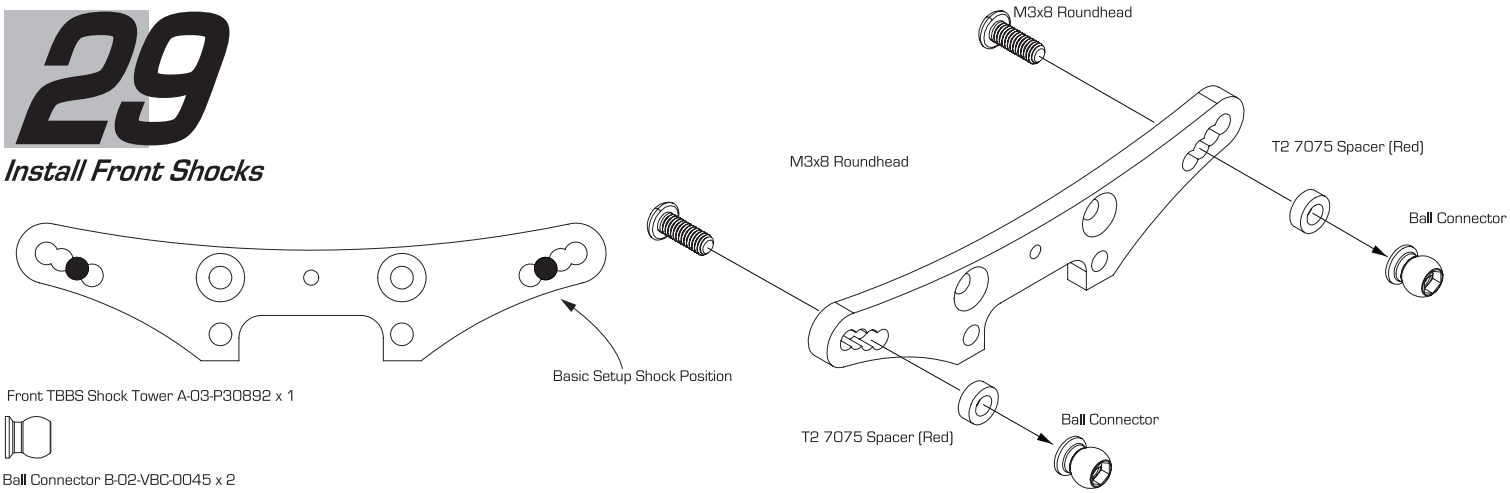

Front TBBS Shock Tower A-03-P30892 x 1

Ball Connector B-02-VBC-0045 x 2

M3x8 Round Head Screw C-02-SC-R0308 x 4

M3x8 Flat Head Screw C-02-SC-F0308 x 2

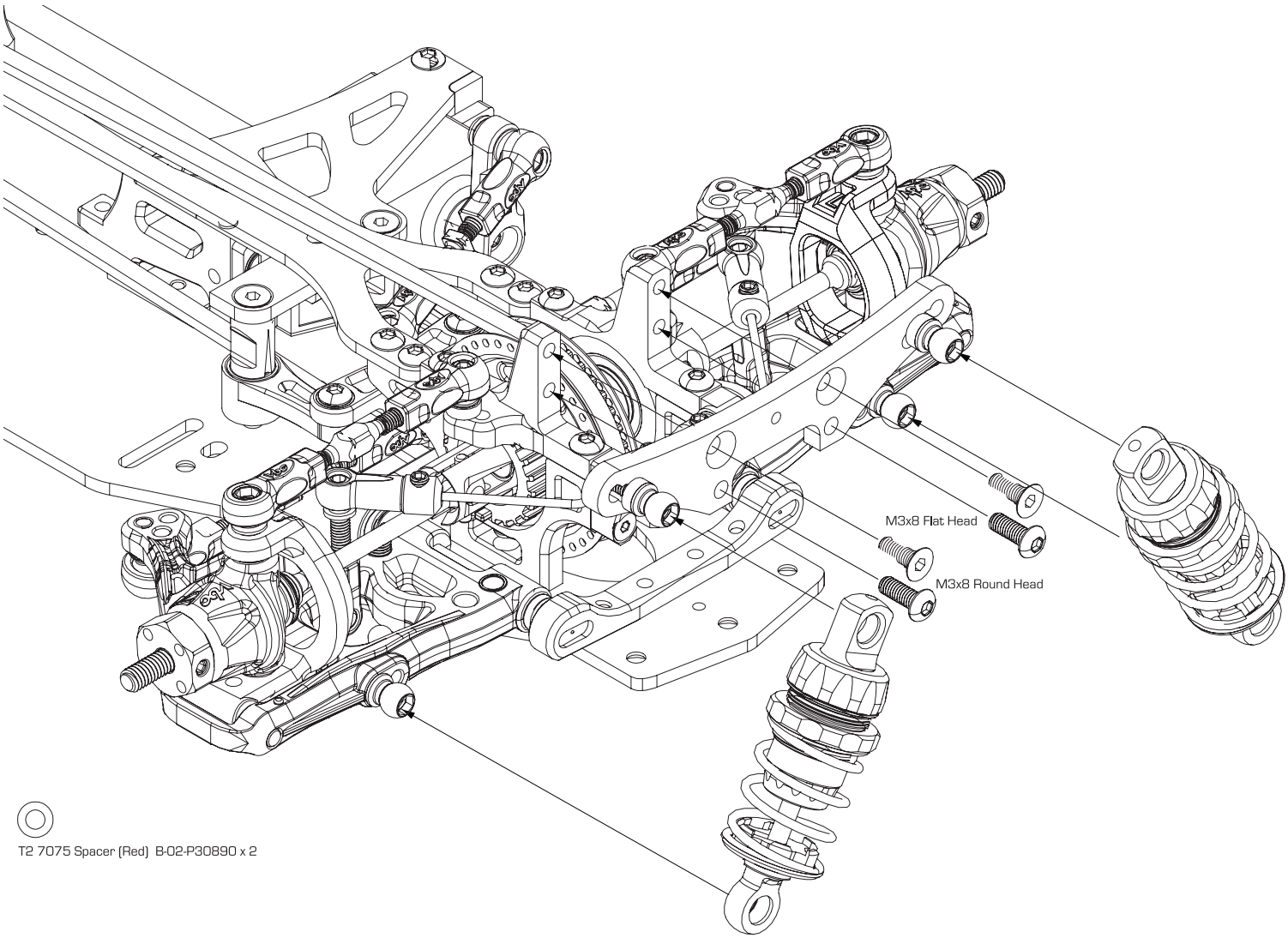

T2 7075 Spacer (Red) B-02-P30890 x 2

30

Install Rear Shocks

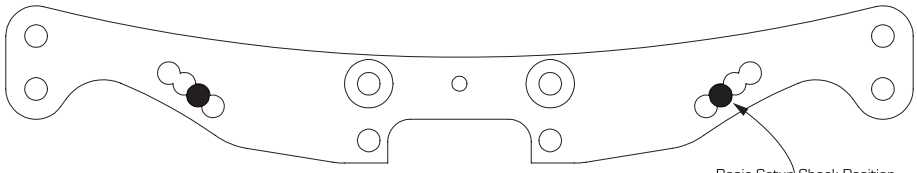

Rear TBBS Shock Tower A-03-P30892

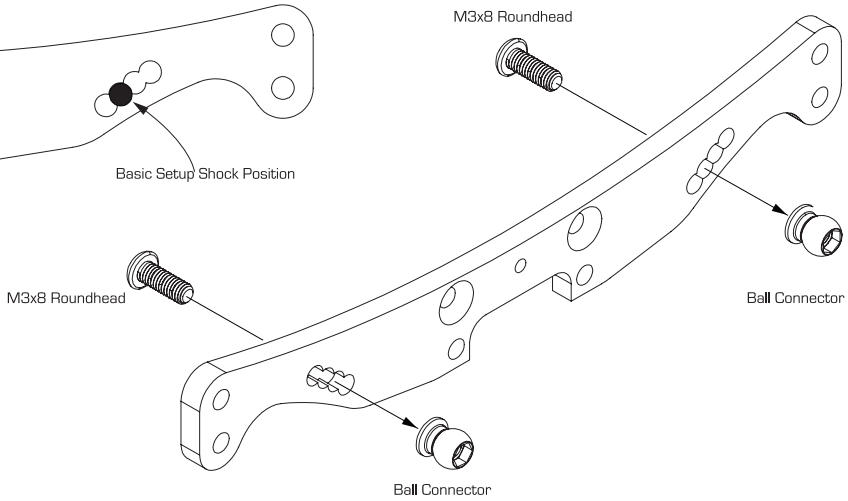

Ball Connector B-02-VBC-0045 x 2

M3x8 Round Head Screw C-02-SC-SS-0308 x 4

M3x8 Flat Head Screw C-02-SC-F0308 x 2

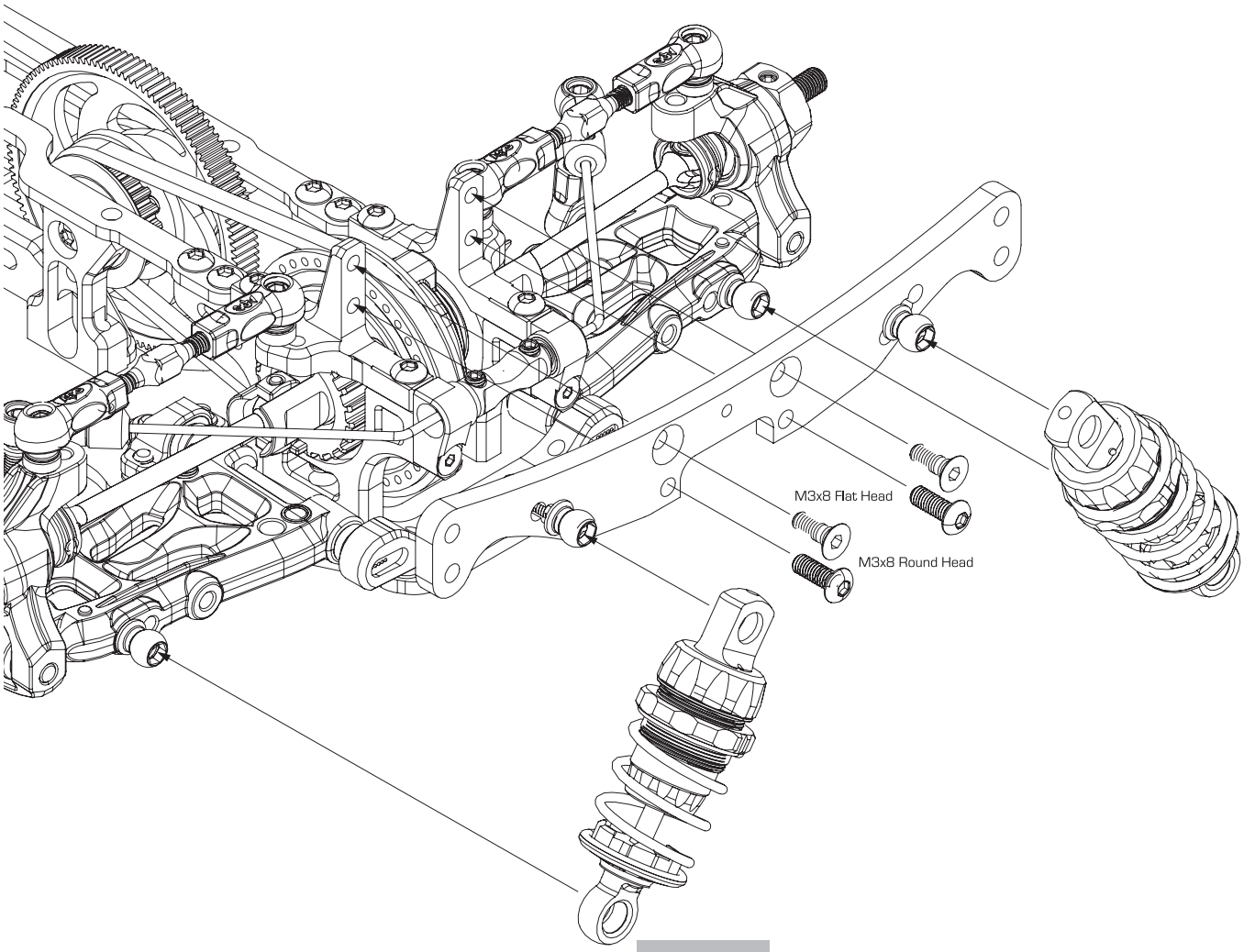

© VBC Racing WILDFIRE D09

31

Install Motor

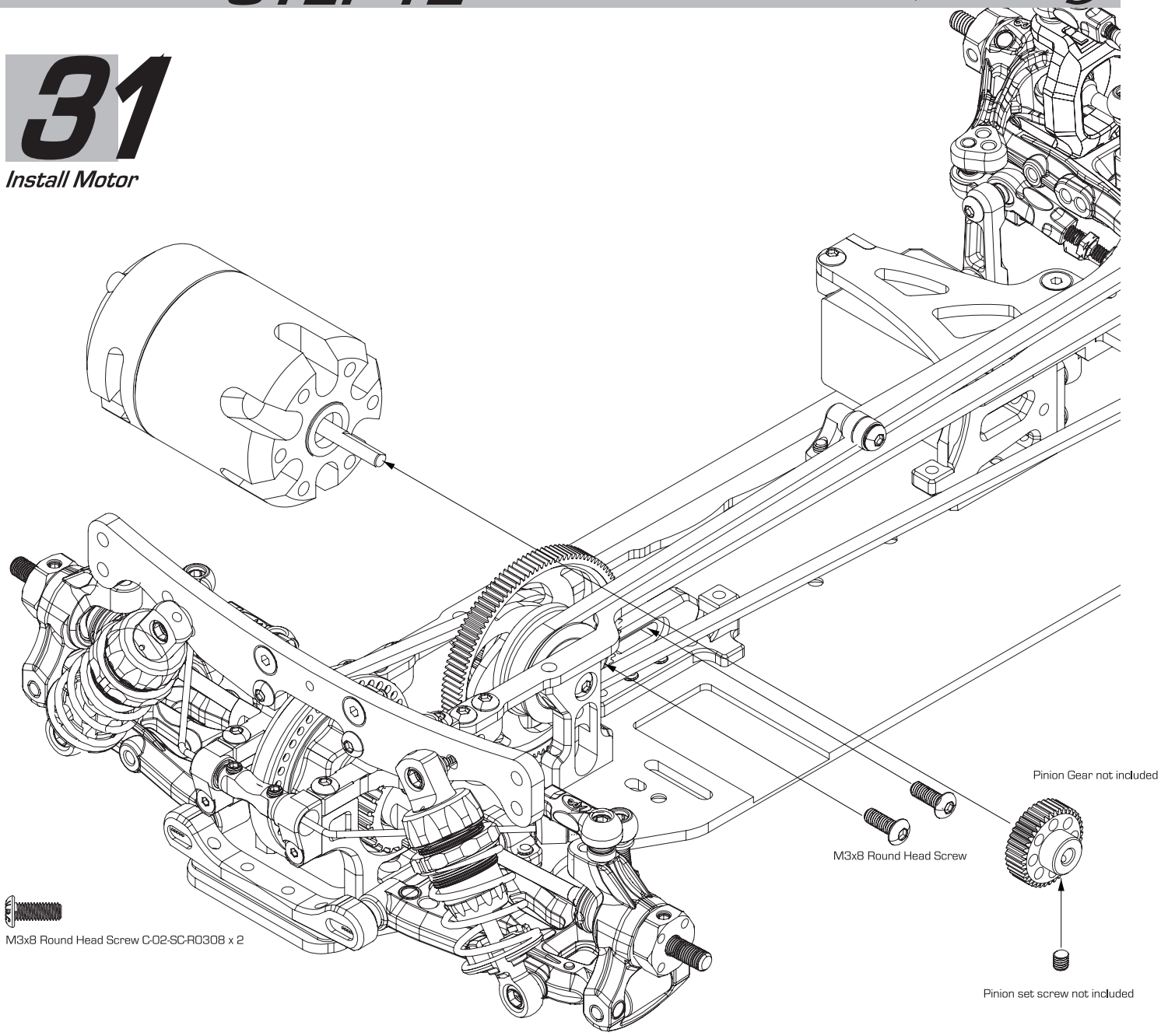

© VBC Racing WILDFIRE D09

32

Centerline Flex Chassis Adjustment

M3x42mm Turnbuckle B-02-VBC-0037 x 1

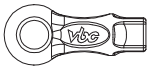

Turnbuckle Cup A-03-VBC-0039 x 2

Ball Connector (5mm Length) B-02-VBC-3021 x 2

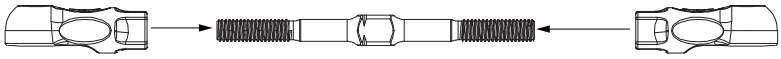

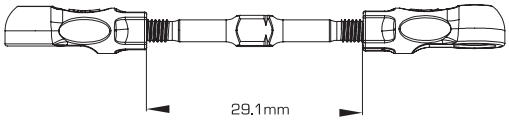

Ball Connector (5mm Length)

The linkage must move freely

© VBC Racing WILDFIRE D09

33

Install Front Bumper and Body Posts

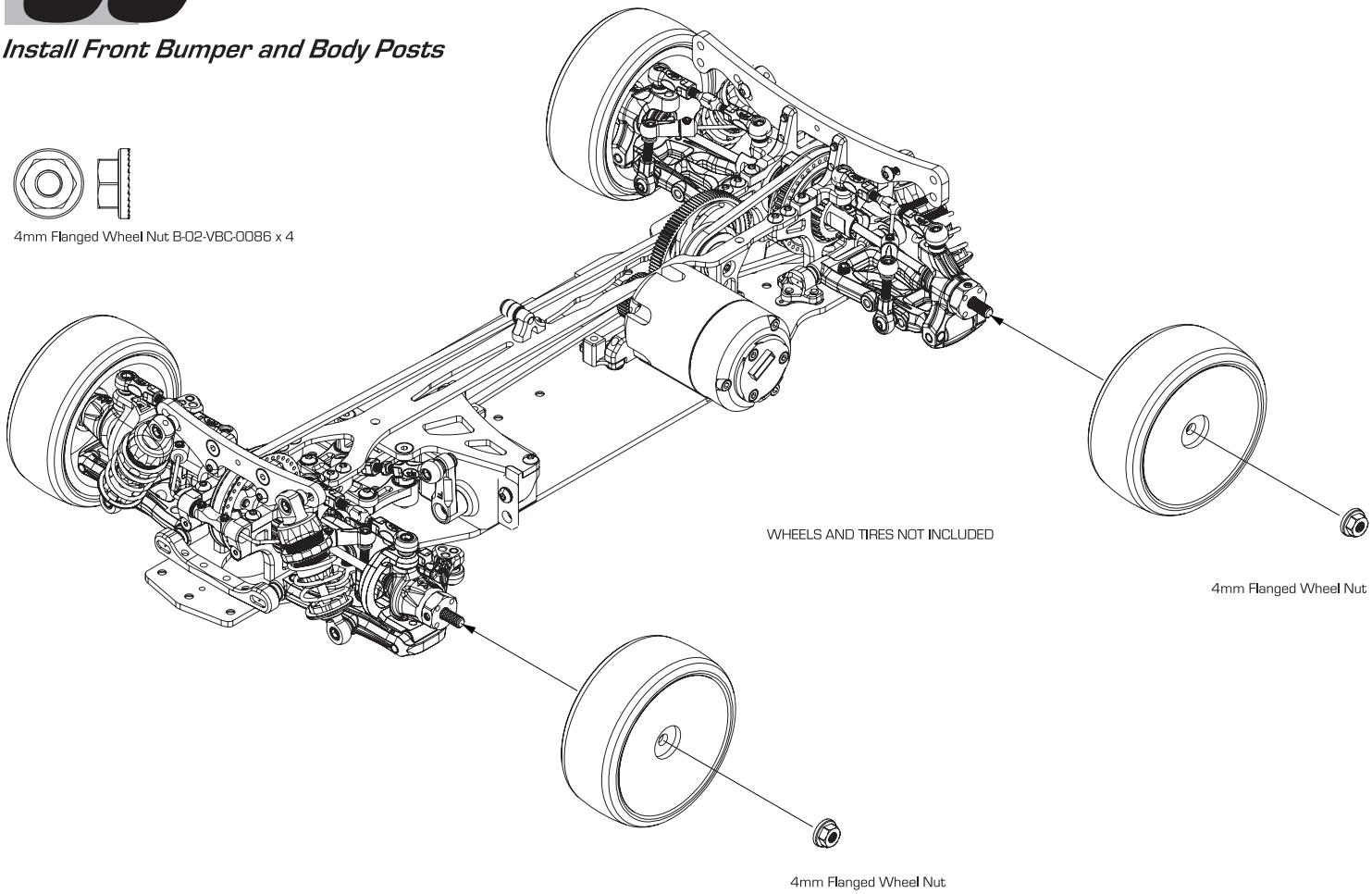

© VBC Racing WILDFIRE D09

34

Install Front Bumper Part 2

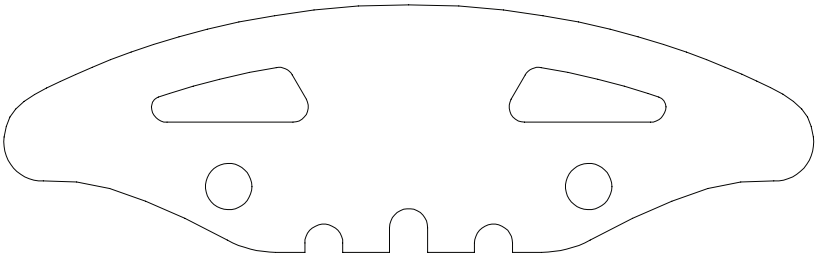

Front Foam Bumper B-03-VBC-0009 x 1

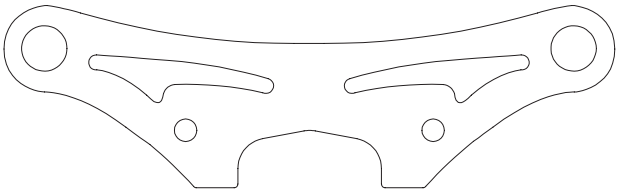

Graphite Bumper Top Plate A-01-P30950 x 1

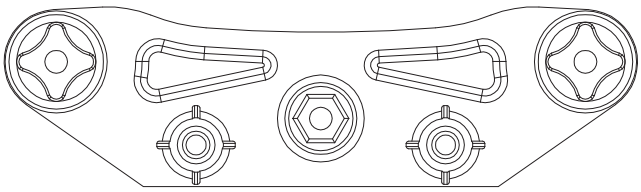

Bumper Top Plate A-03-VBC-0011 x 1

M3 Lock Nut C-02-SC-NN03 x 1

M3x10mm Flat Head Screw C-02-SC-F0310 x 2

M2x12 Shaft Pin B-02-VBC-0022 x 2

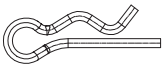

Body Clip B-02-VBC-0076 x 2

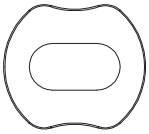

Body Height Adjuster Support A-03-VBC-0015 x 2

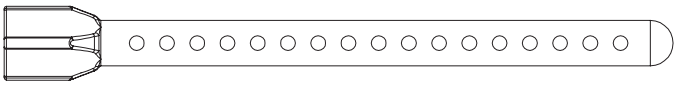

Front Body Post A-03-VBC-0013 x 2

M3x10mm Round Head Screw C-02-SC-R0310 x 2

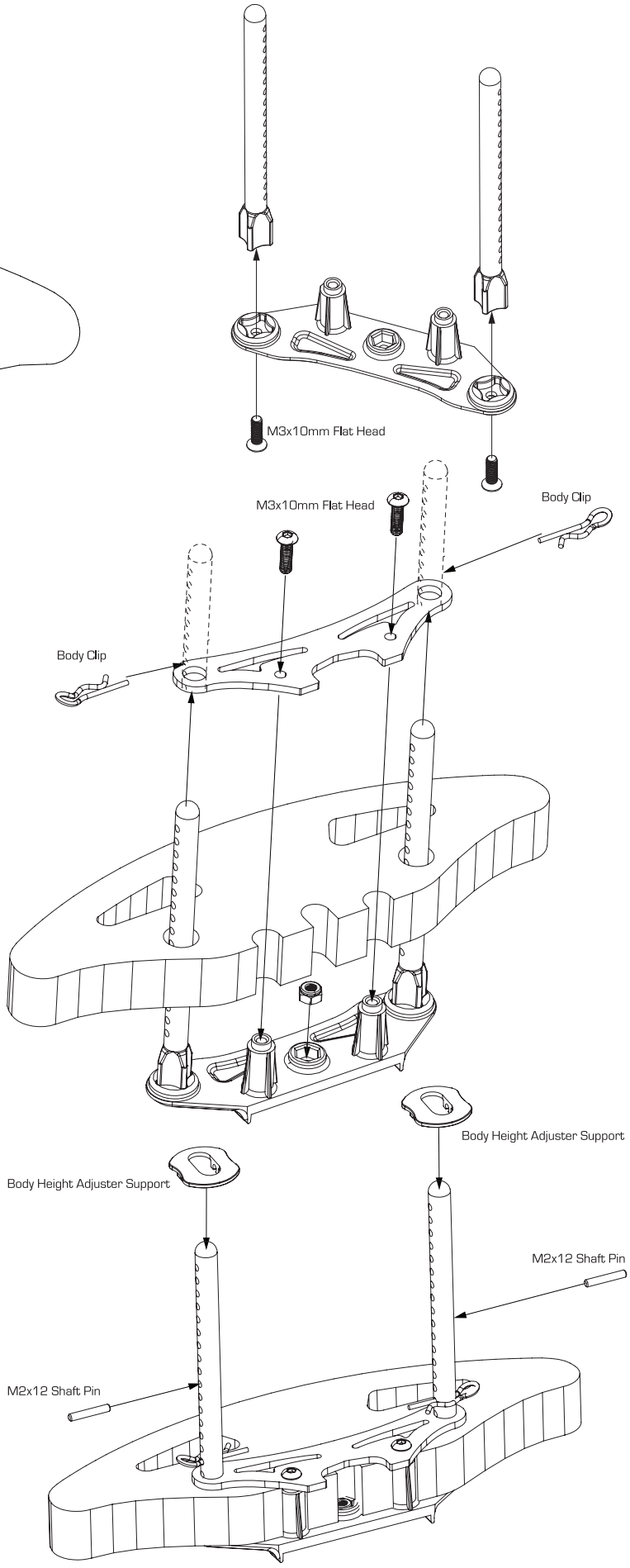

© VBC Racing WILDFIRE D09

35

Install Rear Body Posts and Electronics

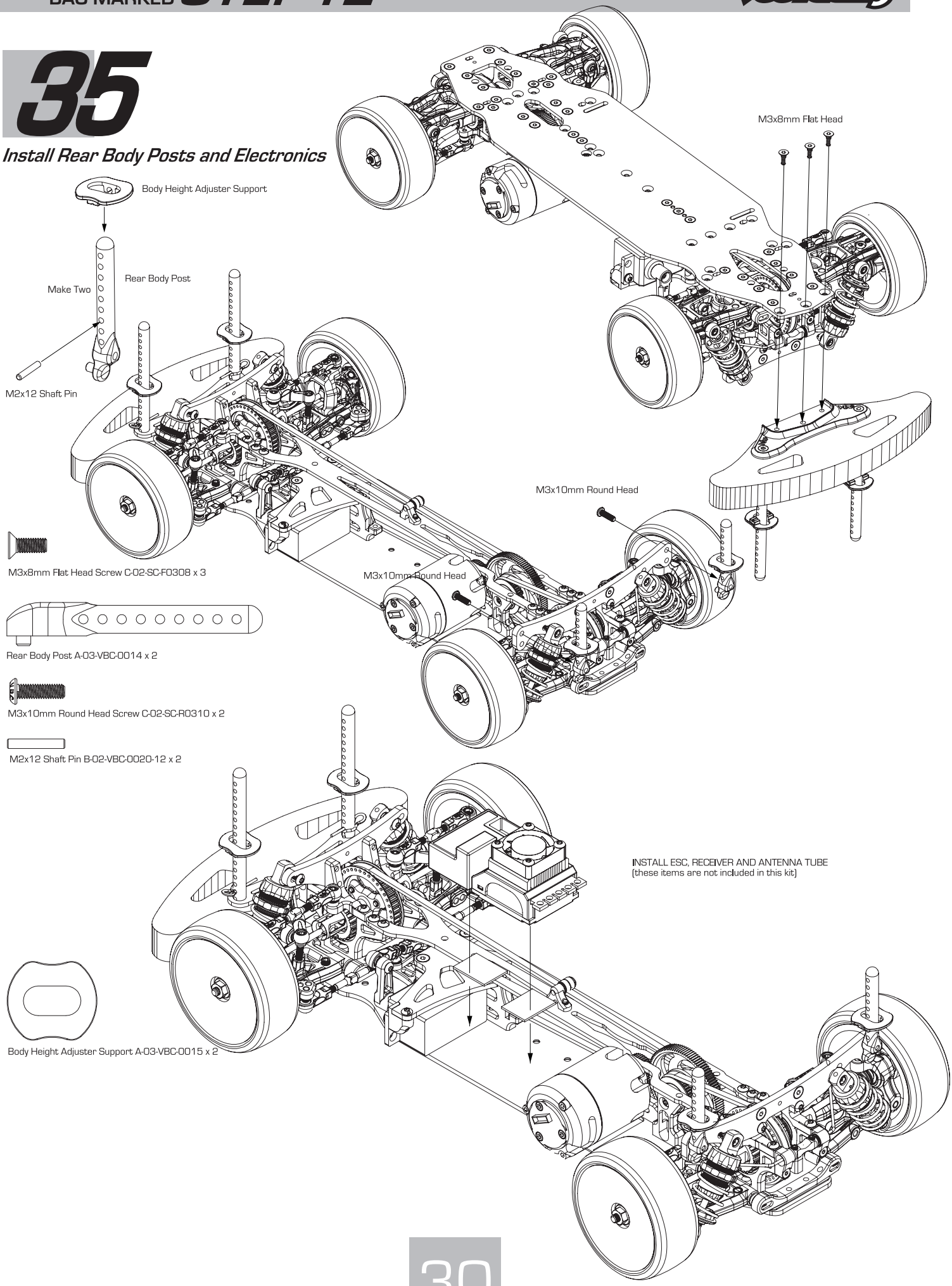

© VBC Racing WILDFIRE D09

35

Install Battery Guards

Centerline Battery Stopper B-02-VBC-3034 x 1

M3x10mm Flat Head Screw
C-02-SC-F0310 x 1

M3x6 Flathead C-02-SC-F0306 x 2

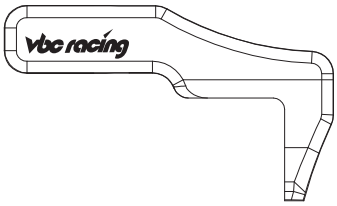

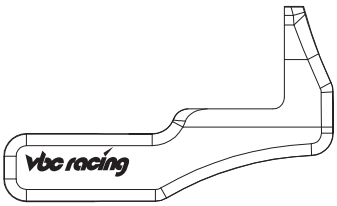

Plastic Battery Mount A-03-VBC-3025 x 1

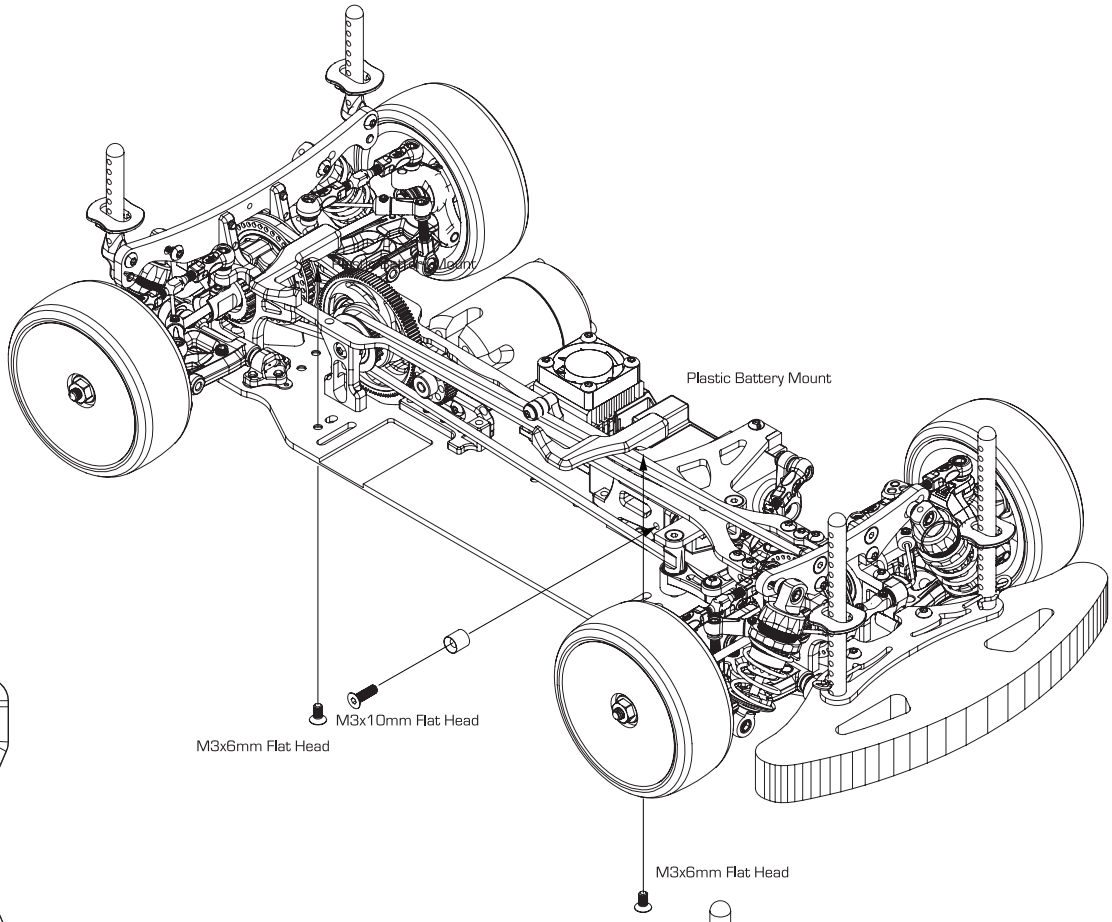

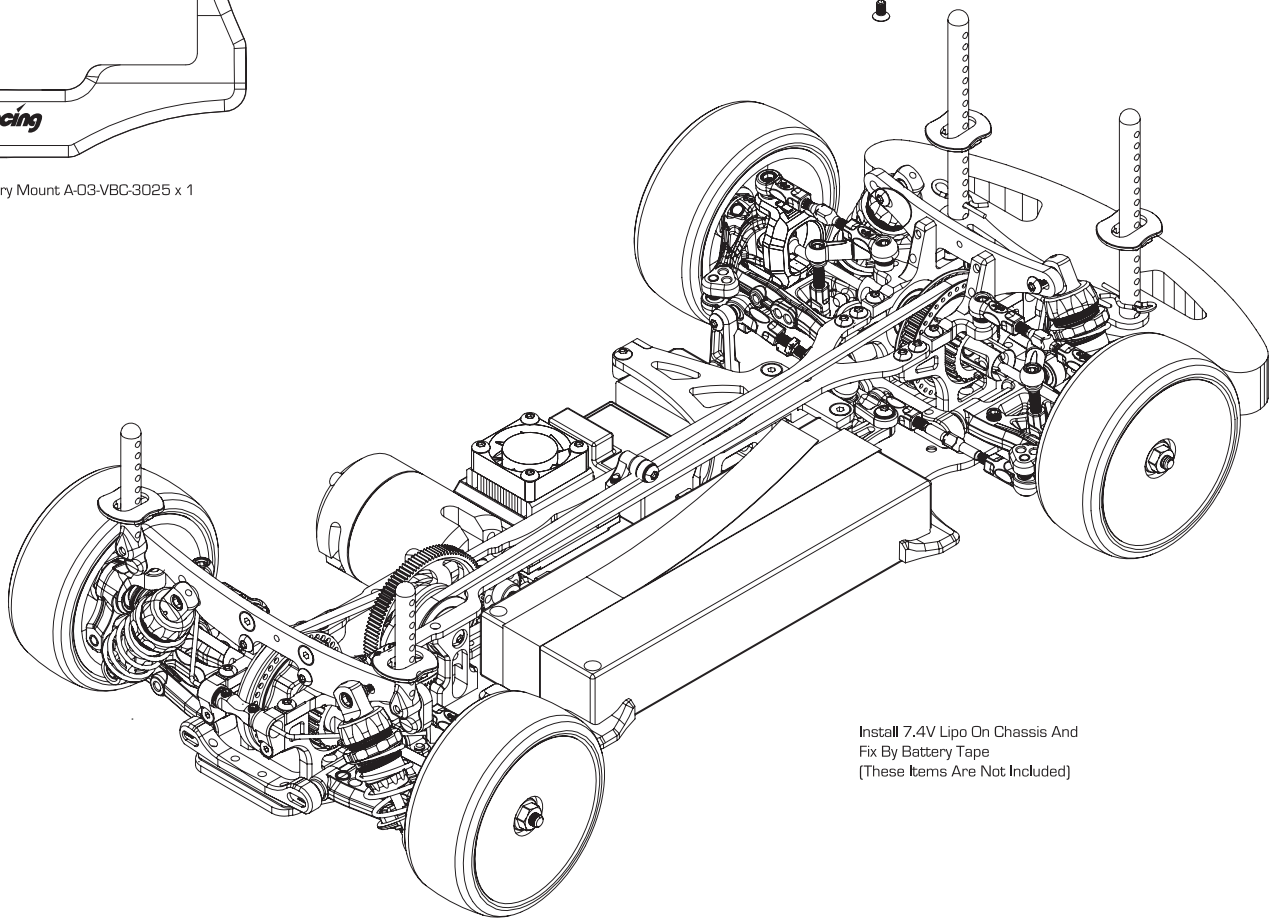

© VBC Racing WILDFIRE D09

Part List

D-05-VBC-0043	Inner Axle/Axle Joint Set	B-02-VBC-0024	Inner Axle
		B-02-VBC-0026	Axle Joint
B-02-VBC-0025	Wheel Axle	B-02-VBC-0025	Wheel Axle
A-03-VBC-0106	Lightweight Hardened Spool Outdrive	A-03-VBC-0106	Lightweight Hardened Spool Outdrive
B-02-VBC-0027	Axle Lock Spring	B-02-VBC-0027	Axle Lock Spring
B-02-VBC-3035	M2x12 Shaft Pin	B-02-VBC-3035	M2x12 Shaft Pin
D-05-VBC-0222	0 Offset Hex Wheel Hub (Lightweight)	B-02-P30887	0 Offset Hex Wheel Hub (Lightweight)
		C-02-SC-SS-0303	M3x3 Set Screw
B-02-VBC-0036	M3x32mm Turnbuckle	B-02-VBC-0036	M3x32mm Turnbuckle
B-02-VBC-0032	M3x23 Upright Pin	B-02-VBC-0032	M3x23 Upright Pin
D-05-VBC-0044	Turnbuckle Cup Open Type Set	A-03-VBC-0040	Turnbuckle Cup Open Type S
		A-03-VBC-0041	Turnbuckle Cup Open Type L
B-02-P31318	One Piece Mount FR	B02P31318	One Piece Mount FR
B-02-P31312	Split Mount CO	B02P31312	Split Mount CO
B-02-P31317	Suspension Mount RR	B02P31317	Suspension Mount RR
B-02-P31316	Suspension Mount FF	B02P31316	Suspension Mount FF
D-05-VBC-0223	Stabilizer Mount Set	B-02-P30803	Stabilizer Mount B
		B-02-P30812	Stabilizer Mount A
		C-02-BB-0603	3x6 Ball Bearing
A-03-P30898	Steering Block Composite X Sliver	A03P30898	Steering Block Composite X Sliver
D-05-VBC-0224	WildFire C-Hub Set Composite X Sliver	A03P30900	R C-Hub Composite X Sliver
		A03P30901	L C-Hub Composite X Sliver
B-02-VBC-0033	Steering Swivel Tube	B-02-VBC-0033	Steering Swivel Tube
D-05-VBC-0097	Battery Mount Set Centerline Battery Stopper	A-03-VBC-3025	WildFireD06 Battery Mount
		B-02-VBC-3034	WildFireD06 Centerline Battery Stopper
D-05-VBC-0176	Standard Stabilizer Set	C02P30248	D07 Front Stabilizer 1.3 Red
		C02P30249	D07 Rear Stabilizer 1.3 Red
D-05-VBC-0180	Stabilizer Ball Connector	A03P30150	Stabilizer Ball Connector
		C-02-SC-SS-0303	M3x3 Set Screw
D-05-VBC-0153	WildFire Dynamics Editio	A-03-VBC-3048	Belt Tension Adjuster Ring (Black)
		C-02-SC-R2.0x4	M2x4 Roundhead Screw
		C-02-SC-R2.0x10	M2x10 Roundhead Screw
D-05-VBC-0236	True Big Bore Short (TBB	B02G30955	TBBS Shock Body
		B-02-VBC-0121	TBB Shock Height Adjuster
		B02G30956	TBBS Bottom Cap
		A-03-VBC-0138	TBB Shock Piston (4 holes)
		A-03-VBC-0124	TBB Shock Bottom Connector
		B-02-VBC-0125	TBB Shaft Cap
		C02G30957	TBBS Shock Shaft
		B-03-VBC-0128	TBB Sealer O-Ring (Shock Height Adjuster
		B-03-VBC-0012	TBB Shaft Sealer O-Ring
		B-03-VBC-0129	M2 E-Clip
		A-03-VBC-0130	TBB Shock Top Connector
		A-03-VBC-0131	TBB Spring Bottom Support
		B-03-VBC-0140	TBB Short Oil Sealer Cap (Medium Soft)
		B-02-VBC-0133	TBB Shock Body Cap
		N01G30991	SMJ Silver Line Spring TS2.8 (Short/Blue
		N01G30992	SMJ Silver Line Spring TS3.0 (Short/Silve
A-03-VBC-0123	TBB Shock Piston (3 hole	A-03-VBC-0123	TBB Shock Piston (3 holes)
A-03-VBC-0138	TBB Shock Piston (4 hole	A-03-VBC-0138	TBB Shock Piston (4 holes)
C-02-G30957	TBBS Shock Shaft	C02G30957	TBBS Shock Shaft
D-05-VBC-0088	TBB Shocks Parts Set	A-03-VBC-0130	TBB Shock Top Connector
		A-03-VBC-0126	TBB Shaft Guide
		B-02-VBC-0125	TBB Shaft Cap
		A-03-VBC-0124	TBB Shock Bottom Connector
		A-03-VBC-0131	TBB Spring Bottom Support
D-05-VBC-0095	TBB Oil Sealer Cap Set	B-03-VBC-0139	TBB Oil Sealer Cap (Soft)
		B-03-VBC-0132	TBB Oil Sealer Cap (Medium Soft)
		B-03-VBC-0141	TBB Oil Sealer Cap (Medium Hard)
		B-03-VBC-0142	TBB Oil Sealer Cap (Hard)
A-01-G-30982	LCG Front Shock Tower fo	A01P30802	LCG Front Shock Tower for TBBS
A-01-G-30983	LCG Rear Shock Tower fo	A01P30983	LCG Rear Shock Tower for TBBS
D-05-VBC-0018	WildFire Servo Horn Set	A-03-VBC-0053	Servo Horn Type F (Composite)
		A-03-VBC-0054	Servo Horn Type A (Composite)
		A-03-VBC-0032	Servo Spacer 1mm
		A-03-VBC-0033	Servo Spacer 2mm
D-05-VBC-0013	WildFire Bumper Pack	A-03-VBC-0011	Front Bumper Bottom Support
		A-02-VBC-0062	Bumper Top Plate
D-05-VBC-0012	WildFire Body Posts Pac	A-03-VBC-0013	Front Body Post
		A-03-VBC-0014	Rear Body Post
		A-03-VBC-0015	Body Height Adjuster Support
		B-02-VBC-0076	Body Clip
		B-02-VBC-0020-12	M2x12 Shaft Pin
B-03-VBC-0009	WildFire Front Foam Bur	B-03-VBC-0009	Front Foam Bumper
C-02-SC-F0256	M2.5x6 Flathead Screw	C-02-SC-F0256	M2.5x6 Flathead Screw
C-02-SC-F0306	M3x6 Flathead Screw	C-02-SC-F0306	M3x6 Flathead Screw
C-02-SC-F0308	M3x8 Flathead Screw	C-02-SC-F0308	M3x8 Flathead Screw
C-02-SC-F0310	M3x10 Flathead Screw	C-02-SC-F0310	M3x10 Flathead Screw
C-02-SC-F0312	M3x12 Flathead Screw	C-02-SC-F0312	M3x12 Flathead Screw
C-02-SC-R0304	M3x4 Roundhead Screw	C-02-SC-R0304	M3x4 Roundhead Screw
C-02-SC-R0306	M3x6 Roundhead Screw	C-02-SC-R0306	M3x6 Roundhead Screw
C-02-SC-R0308	M3x8 Roundhead Screw	C-02-SC-R0308	M3x8 Roundhead Screw

C-02-SC-R0309	M3x9 Roundhead Screw	C-02-SC-R0309	M3x9 Roundhead Screw
C-02-SC-R0310	M3x10 Roundhead Screw	C-02-SC-R0310	M3x10 Roundhead Screw Option
C-02-SC-R-0312	M3x12 Roundhead Screw	C-02-SC-R-0312	M3x12 Roundhead Screw
C-02-SC-R-0316	M3x16 Roundhead Screw	C-02-SC-R-0316	M3x16 Roundhead Screw Option
C-02-SC-R2.0x10	M2x10 Roundhead Screw	C-02-SC-R2.0x10	M2x10 Roundhead Screw
C-02-SC-R1.6x4	M1.6x4 Screw	C-02-SC-R1.6x4	M1.6x4 Screw
B-02-VBC-0076	Body Clips (20pcs)	B-02-VBC-0076	Body Clip
D-05-VBC-0057	Shims 0.1,0.2,0.3mm P	B-02-VBC-0103	M3 0.1mm shims
		B-02-VBC-0100	M3 0.2mm shims
		B-02-VBC-0101	M3 0.3mm shims
C-02-P30914	10 x 12 x 0.3mm Spacer	C02P30914	10 x 12 x 0.3mm Spacer
B-03-VBC-0012	Shaft Sealer O-Ring	B-03-VBC-0012	Shaft Sealer O-Ring
B-02-VBC-3036	Ball Connector (5mm Le	B-02-VBC-3036	Ball Connector (5mm Length)
B-02-VBC-3037	Ball Connector (7.5mm L	B-02-VBC-3037	Ball Connector (7.5mm Length)
B-02-G-30391	7075 Aluminium Lightw	B02G30391	7075 Aluminium Lightweight Spool Shaft
C-02-P30941	Double Joint Pin	C02P30941	Double Joint Pin
D09 Option Parts			
D-05-VBC-0048	Tie Rod Wrench Set	A-01-VBC-0044	Turnbuckle Wrench
		A-01-VBC-0045	Ball Connector Wrench
B-02-VBC-0095	Titanium Coated Center	B-02-VBC-0095	Titanium Coated Center Shaft Pin
B-02-VBC-0096	Titanium Coated Upright	B-02-VBC-0096	Titanium Coated Upright Shaft
B-02-VBC-0098	Titanium Coated Suspen	B-02-VBC-0098	Titanium Coated Suspension Arm Pin
D-05-VBC-0059	Graphite Wing Height Adj	A-03-VBC-0118	Wing Height Adjuster Top Mount
		A-03-VBC-0102	Wing Spacer (2.0mm)
		A-03-VBC-0103	Wing Spacer (2.5mm)
		C-02-SC-R0310	M3x10 Roundhead Screw Option
		C-02-SC-NN03	M3 Lock Nut
D-05-VBC-0070	Center Inlined Adj Batter	A-03-VBC-0110	Front Center Inlined Battery Mount
		A-03-VBC-0109	Rear Center Inlined Adjustable Battery M
		A-03-VBC-0117	Inlined Battery Mount Adjuster
		C-02-SC-F0306	M3x6 Flathead Screw
		C-02-SC-SS-0306	M3x6 Set Screw
B-02-VBC-3040	Lightweight Aluminium D	B-02-VBC-3040	Aluminium Damper Retainer for TBB Sho
A-02-VBC-A004G	VBC Racing Personal Ne	A-02-VBC-A004G	VBC Racing Personal Neoprene Pit Mat-
A-02-VBC-A004R	VBC Racing Personal Ne	A-02-VBC-A004R	VBC Racing Personal Neoprene Pit Mat-
A-02-VBC-A005G	VBC Racing Neoprene XL	A-02-VBC-A005G	VBC Racing Neoprene XL Pit Mat-Grey
A-02-VBC-A005R	VBC Racing Neoprene XL	A-02-VBC-A005R	VBC Racing Neoprene XL Pit Mat-Red
A-02-VBC-A006	VBC Racing Banner (90x	A-02-VBC-A006	VBC Racing Banner (90x180cm)
X-02-P00261	VBC Racing Car Protecti	X-02-P00261	VBC Racing Car Protection Bag - M (2pc
D-05-VBC-0231	Center Suspension Mou	A01G30935	Center Suspension Mount Shim(0.5mm)
		A01G30936	Center Suspension Mount Shim(1.0mm)
D-05-VBC-0232	Front/Rear Suspenion Shim (1mm,0.5mm)	A01G30937	1mm Suspension Shim
		A01G30938	0.5mm Suspension Shim Option
A-03-P30926	Steering Block Composit	A03P30926	Steering Block Composite X Gold
D-05-VBC-0227	WildFire C-Hub Set Com	A03P30927	R C-Hub Composite X Gold
		A03P30928	L C-Hub Composite X Gold
D-05-VBC-0228	WildFire Composite X S	A03P30929	F Suspension Arm Composite X Gold
		A03P30930	R Suspension Arm Composite X Gold
D-05-VBC-0184	Body Height Adjuster Set	B-02-G-30325	Body Height Adjuster Cone (RED)
		B-02-G-30326	Body Height Adjuster Ring (RED)
		A-03-VBC-0113	Adjuster O-Ring for BH Adjuster
		C-02-SC-R2508	2.5x8 Cap Screw
		R-02-G30601	P5 Oring
A-03-P30931	R Upright Composite X G	A03P30931	R Upright Composite X Gold
D-05-VBC-0167	Front Stabilizer Set	C-02-G30252	D07 Front Stabilizer 1.4 White Option
		C-02-G30250	D07 Front Stabilizer 1.2 Green Option
D-05-VBC-0168	Rear Stabilizer Set	C-02-G30253	D07 Rear Stabilizer 1.4 White Option
		C-02-G30251	D07 Rear Stabilizer 1.2 Green Option
D-05-VBC-0181	Cooling Fan Mount	B02G30290	WildFireD07 Fan Mount PartA
		B02G30291	WildFireD07 Fan Mount PartB
		C-02-SC-R0314	M3x14 Roundhead Screw
		C-02-SC-R-0306	M3x6 Roundhead Screw
B-02-G31311	WildFireD09 Aluminum	B02G31311	WildFireD09 Aluminum 7075 Chassis
C-02-G31319	WildFireD09 8.6g Weigh	C02G31319	WildFireD09 8.6g Weight for Suspensio
D-05-VBC-0183	WildFire 'ARTS - Active R	A03P30898	Steering Block Composite X Sliver
		A-03-VBC-0039	Turnbuckle Cup
		A03P30899	F Suspension Arm Composite X Sliver
		B-02-VBC-0032	M3x23 Upright Pin
		B-02-VBC-0033	Steering Swivel Tube
		B-02-VBC-0038	M3x18mm Turnbuckle
		B-02-VBC-0045	Ball Connector
		B-02-VBC-3021	Ball Connector (5mm Lenght)
		C-02-SC-F0308	M3x8 Flathead Screw
		C-02-SC-F0310	M3x10 Flathead Screw
		C-02-SC-R0309	M3x9 Roundhead Screw
		C-02-SC-SS-0304	M3x4 Set Screw
		C-02-SC-SS-0312	M3x12 Set Screw
		B02G30172	Alum C-Hub 2deg, Left
		B02G30173	Alum C-Hub 2deg, Right
		B-02-VBC-0019-20	T2 7075 Spacer
		C-02-SC-SS-0410	M4x10 Set Screw

B-02-G30172	7075 Alu C-Hub 2deg, Left	B02G30172	Alum C-Hub 2deg, Left
B-02-G30173	7075 Alu C-Hub 2deg, Right	B02G30173	Alum C-Hub 2deg, Right
N-01-G30991	SMJ Silver Line Spring TS2.8 (Short/Blue) for TBBS	N01G30991	SMJ Silver Line Spring TS2.8 (Short/Blue)
N-01-G30992	SMJ Silver Line Spring TS3.0 (Short/Silver) for TBBS	N01G30992	SMJ Silver Line Spring TS3.0 (Short/Silver)
N-01-G30993	SMJ Silver Line Spring TS3.2 (Short/Pink) for TBBS	N01G30993	SMJ Silver Line Spring TS3.2 (Short/Pink)
N-01-G30994	SMJ Silver Line Spring TS3.5 (Short/Gold) for TBBS	N01G30994	SMJ Silver Line Spring TS3.5 (Short/Gold)
N-01-G31272	SMJ Silver Line Progressive Spring TS2.5-2.7 (Short/Yellow) for TBBS	N01G31272	SMJ Silver Line Progressive Spring TS2.5-2.7 (Short/Yellow) for TBBS
N-01-G31273	SMJ Silver Line Progressive Spring TS2.5-2.8 (Short/Red) for TBBS	N01G31273	SMJ Silver Line Progressive Spring TS2.5-2.8 (Short/Red) for TBBS
N-01-G31274	SMJ Silver Line Progressive Spring TS2.5-3.0 (Short/Purple) for TBBS	N01G31274	SMJ Silver Line Progressive Spring TS2.5-3.0 (Short/Purple) for TBBS
C-02-G31038	Titanium Coated TBBS Shock Shaft	C02G31038	Titanium Coated TBBS Shock Shaft
C-02-G31009	Brass Suspension Mount (9.5gm)	C02G31009	Brass Suspension Mount (9.5gm)
C-02-G31011	Brass Solid FR Mount (10.9gm)	C02G31011	Brass Solid FR Mount (10.9gm)
C-02-G31012	Brass Split Mount (4.3gm)	C02G31012	Brass Split Mount (4.3gm)
D-05-VBC-0246	LCG Center Balance Weight Set (12.5+18.5gm)	C02G31016	12.5gm LCG Center Balance Weight
		C02G31017	18.5gm LCG Center Balance Weight
		C-02-SC-R0304	M3x4 Roundhead Screw
D-05-VBC-0250	WildFire Anti-Tweak Battery Mount	B-02-G31173	WildFire Battery Holder Front
		B-02-G31174	WildFire Battery Holder Rear Cover
		B-02-G31175	WildFire Battery Holder Rear Base
		C-02-SC-R0304	M3x4 Roundhead Screw
		C-02-SC-F0306	M3x6 Flathead Screw
D-05-VBC-0249	WildFire Graphite Composite X Suspension Arm Set Red	A03G31299	F Suspension Arm Composite X Red
		A03G31300	R Suspension Arm Composite X Red
A-03-P30897	R Upright Composite X Sliver	A03P30897	R Upright Composite X Sliver

Part List

Order Number	Package Descriptions	Parts Number	Parts Descriptions
D-05-VBC-0215	Gear Differential with Lightweight Diff Cup	A-03-VBC-0016	Gear Diff Housing
		A-03-VBC-0017	Gear Diff Pulley 38T
		A-03-VBC-0018	Diff Gear 10T
		A-03-VBC-0019	Diff Gear 18T
		A-03-VBC-0020	Diff Gear Shaft
		B-03-VBC-0004	Seal Gasket
		B-03-VBC-0006	Diff Shaft Sealer O-Ring
		B-03-VBC-0005	Diff Housing Sealer O-Ring
		C-02-SC-F2.6x10	M2.6x10 Flathead Screw
		B-02-P30888	Lightweight Diff Cup
		B-02-VBC-0020	M2x10 Shaft Pin
		B-02-VBC-0077	15x0.3mm Shim
		B-02-VBC-0078	9.5x0.2mm Shim
D-05-VBC-0034	Differential Gear Set	A-03-VBC-0018	Diff Gear 10T
		A-03-VBC-0019	Diff Gear 18T
		A-03-VBC-0020	Diff Gear Shaft
D-05-VBC-0053	Gear Differentials 38T Housing Set	A-03-VBC-0016	Gear Diff Housing
		A-03-VBC-0017	Gear Diff Pulley 38T
B-02-P30888	Lightweight Diff Cup	B-02-P30888	Lightweight Diff Cup
B-03-VBC-0005	Gear Differentials O-Ring Set	B-03-VBC-0005	Diff Housing Sealer O-Ring
		B-03-VBC-0006	Diff Shaft Sealer O-Ring
B-03-VBC-0004	Seal Gasket	B-03-VBC-0004	Seal Gasket
D-05-VBC-0035	Gear Differentials Shims Set	B-02-VBC-0077	15x0.3mm Shim
		B-02-VBC-0078	9.5x0.2mm Shim
B-02-VBC-0020	M2x10 Shaft Pin	B-02-VBC-0020	M2x10 Shaft Pin
C-02-BB-1510-P	10x15 Ball Bearing	C-02-BB-1510-P	10x15 Ball Bearing
D-05-VBC-0259	WildFireD09 Center Pulley Shaft Set	C02P31253	WildFireD09 Center Pulley Shaft
		C02P31343	M4 E-clip
D-05-VBC-0256	WIldFireD09 Steering Set	B02P31172	WildFireD09 Steering Arm
		B02P31171	WildFireD09 Steering Bridge
		B02P30154	WildFireD09 Steering Top-mounted
		C-02-BB-0805-B	5x8 Ball Bearing
		C-02-BB-0603	3x6 Ball Bearing
		A03P31176	WildFireD09 POM Steering Stopper
		B-02-VBC-3037	Ball Connector (7.5mm Length)
		B-02-VBC-3036	Ball Connector (5mm Lenght)
D-05-VBC-0257	WildFireD09 Servo Mount Set	A01P31296	WildFire D09 Servo Mount Plate
		B02P31313	WildFire D09 Servo Mount Extension Plate
		B02P31297	WildFire D09 Servo Standoff
		B02P31298	WildFire D09 Servo Side Mount
A-01-P31296	WildFire D09 Servo	A01P31296	WildFire D09 Servo Mount Plate
B-02-VBC-5015	Ball Connector	B-02-VBC-5015	Ball Connector 4.7x12mm (5pcs)
A-03-VBC-5016	Turnbuckle Cup (Long)	A-03-VBC-5016	Turnbuckle Cup (Long)
C-02-BB-0603	3x6 Ball Bearing	C-02-BB-0603	3x6 Ball Bearing
A-03-VBC-0039	Turnbuckle Cup (Grey)	A-03-VBC-0039	Turnbuckle Cup
A-03-VBC-0039Y	Turnbuckle Cup (Yellow)	A-03-VBC-0039Y	Turnbuckle Cup
A-03-P30952	Camber Link Turnbuckle	A03P30952	Camber Link Turnbuckle (Front)
B-02-VBC-0037	M3x42mm Turnbuckle	B-02-VBC-0037	M3x42mm Turnbuckle
B-02-VBC-0038	M3x18mm Turnbuckle	B-02-VBC-0038	M3x18mm Turnbuckle
B-03-VBC-3001	Front Belt	B-03-VBC-3001	Front Belt
B-03-G30288	WildFireD09 Rear Belt	B03G30288	WildFireD09 Rear Belt
D-05-VBC-0216	Lightweight Mid Belt Tensioner Set	B02P30894	Lightweight Center Belt Tensioner
		C-02-BB-0603	3x6 Ball Bearing
		B-02-VBC-0101	M3 0.3mm Shim
		C-02-SC-R-0306	M3x6 Roundhead Screw
		C-02-SC-R-0310	M3x10 Roundhead Screw
D-05-VBC-0161	Center Pulley Set	B02P30144	Alu Center Pully Spacer
		C-02-BB-0805-B	5x8 Ball Bearing
		B02P30219	Aluminum Center Pulley A 20T
		B02P30220	Aluminum Center Pulley B 20T
		C-02-SC-R0304	M3x4 Roundhead Screw
C-02-BB-0805-B	5x8 Ball Bearing	C-02-BB-0805-B	5x8 Ball Bearing
D-05-VBC-0258	AXON Spur Gear TCS 64P 110T	G02P31281	AXON Spur Gear TCS 64P 110T
		C-02-SC-R0304	M3x4 Roundhead Screw

A-01-P31254	WildFireD09 Standard	A01P31254	WildFireD09 Standard Upper Deck
A-01-P31255	WildFireD09 Standard Graphite Chassis	A01P31255	WildFireD09 Standard Graphite Chassis
A-01-P30950	WildFireD08 Graphite Bumper Top Plate	A01P30950	WildFireD08 Graphite Bumper Top Plate
D-05-VBC-0261	WildFireD09 Front Upper Bulkhead Set	B02P31244	WildFireD09 Upper Front Bulkhead FR
		B02P31243	WildFireD09 Upper Front Bulkhead FL
D-05-VBC-0260	WildFireD09 Rear Upper Bulkhead Set	B02P31247	WildFireD09 Upper Rear Bulkhead RR
		B02P31246	WildFireD09 Upper Rear Bulkhead RL
B-02-P31242	WildFireD09 Lower	B02P31242	WildFireD09 Lower Bulkhead
B-02-P30813	WildFireD08 Stabilizer	B02P30813	WildFireD08 Stabilizer Connector
D-05-VBC-0255	WildFireD09 Motor Mount Set	B02P31248	WildFireD09 Motor Mount A
		B02P31250	WildFireD09 Motor Mount C
B-02-P31249	WildFireD09 Center	B02P31249	WildFireD09 Center Pulley Support
D-05-VBC-0242	VBC Dynamics Stabiliser Link System	C-02-P30249	Rear Stabilizer 1.3
		C-02-P30248	Front Stabilizer 1.3
		A-03-VBC-5021	Turnbuckle Cup (Short)
		C-02-SC-SS-0303	M3x3 Set Screw
		B-02-G31134	VBC Dynamics Stabilizer Connector
		A-02-VBC-5092	4.7x17mm Ballstud
		A-03-VBC-0041	Turnbuckle Cup Opm Type L
		A-03-VBC-0040	Turnbuckle Cup Open Type S
B-02-VBC-3034	Centerline Battery	B-02-VBC-3034	WildFireD06 Centerline Battery
B-02-VBC-0045	Ball Connector	B-02-VBC-0045	Ball Connector
B-02-P31003	T0.5 7075 Spacer (Red)	B-02-P31003	T0.5 7075 Spacer (Red)
B-02-P30891	T1 7075 Spacer (Red)	B02P30891	T1 7075 Spacer (Red)
B-02-P31004	T1.5 7075 Spacer (Red)	B-02-VBC-0019-15	T1.5 7075 Spacer
B-02-P30890	T2 7075 Spacer (Red)	B02P30890	T2 7075 Spacer (Red)
D-05-VBC-0015	WildFire Front Spool Set 38T	A-03-VBC-0021	Front Spool Pulley 38T
		A-03-VBC-0022	Pulley Belt Guide
		A-03-VBC-0049	Spool Drive Shaft
		A-03-VBC-0055	Front Spool Outdrive
		C-02-SC-R0308	M3x8 Roundhead Screw
		C-02-SC-F0312	M3x12 Flathead Screw
A-03-VBC-0055	Front Spool Outdrive	A-03-VBC-0055	Front Spool Outdrive
A-03-VBC-0049	Spool Drive Shaft	A-03-VBC-0049	Spool Drive Shaft
D-05-VBC-0041	Spool Pulley Set	A-03-VBC-0021	Front Spool Pulley 38T
		A-03-VBC-0022	Pulley Belt Guide
D-05-VBC-0220	WildFire Composite X Suspension Arm Set	A03P30899	F Suspension Arm Composite X Sliver
		A03P30896	R Suspension Arm Composite X Sliver
B-02-VBC-0029	Suspension Arm Pin	B-02-VBC-0029	Suspension Arm Pin
B-02-VBC-0035	Arm Pin Pivot Ball	B-02-VBC-0035	Arm Pin Pivot Ball
A-03-P31327	R 2-hole Upright	A03P31327	R 2-hole Upright Composite X Sliver
A-03-VBC-0038	Shaft End Shoe	A-03-VBC-0038	Shaft End Shoe
D-05-VBC-0214	Yaiba Racing Double Universal Joint Axle Set 4130	C02P30939	Double Joint Bone 41.3mm
		B-02-VBC-3035	M2x12 Shaft Pin
		C-02-SC-SS-0302	M3x2 Set Screw
		C02P30940	Double Joint Inner
		C02P30941	Double Joint Pin
		C02P30943	Double Joint Lock Spring Ring
		C02P30942	Double Joint Case
		C02P30944	Double Joint Axle Shaft
D-05-VBC-0212	Suspension Mount Composite Insert Set	A03P30945	Suspension Mount Composite Insert 1
		A03P30946	Suspension Mount Composite Insert 2
		A03P30947	Suspension Mount Composite Insert 3
		A03P30948	Suspension Mount Composite Insert 4
		A03P30949	Suspension Mount Composite Insert 5
D-05-VBC-0221	WIldFire ALU 7075 Drive Axle Set	B-02-VBC-0104	Inner Axle - Aluminum 49mm
		B-02-VBC-0025	Wheel Axle
		B-02-VBC-0026	Axle Joint
		B-02-VBC-0027	Axle Lock Spring
		B-02-VBC-0020	M2x10 Shaft Pin
		B-02-VBC-3035	M2x12 Shaft Pin
		C-02-SC-SS-0302	M3x2 Set Screw
C-02-BB-1005-B	5x10 Ball Bearing	C-02-BB-1005-P	5x10 Ball Bearing

© VBC Racing WILDFIRE D09

www.vbcracing.com

COMPETITION GRADE HIGH PERFORMANCE RADIO CONTROL RACING CAR CHASSIS KIT

WILDFIRE D09

1/10 4WD ELECTRIC COMPETITION TOURING CAR KIT