WILDFIRE 0.03

1/10 4WD ELECTRIC COMPETITION TOURING CAR KIT

ArnO / PetitRC

SETUP SHEET

DRIVER ____ DATE ____ EVENT ____

TRACK ____ GRIP HI / MED / LOW TRACK TEMP ____ HUMIDITY ____

COMPOSITION ASPHALT (INDOOR/OUTDOOR) CARPET SURFACE BUMPY/SMOOTH LAYOUT OPEN/MIXED/TIGHT

RESULT ____ BEST LAP ____

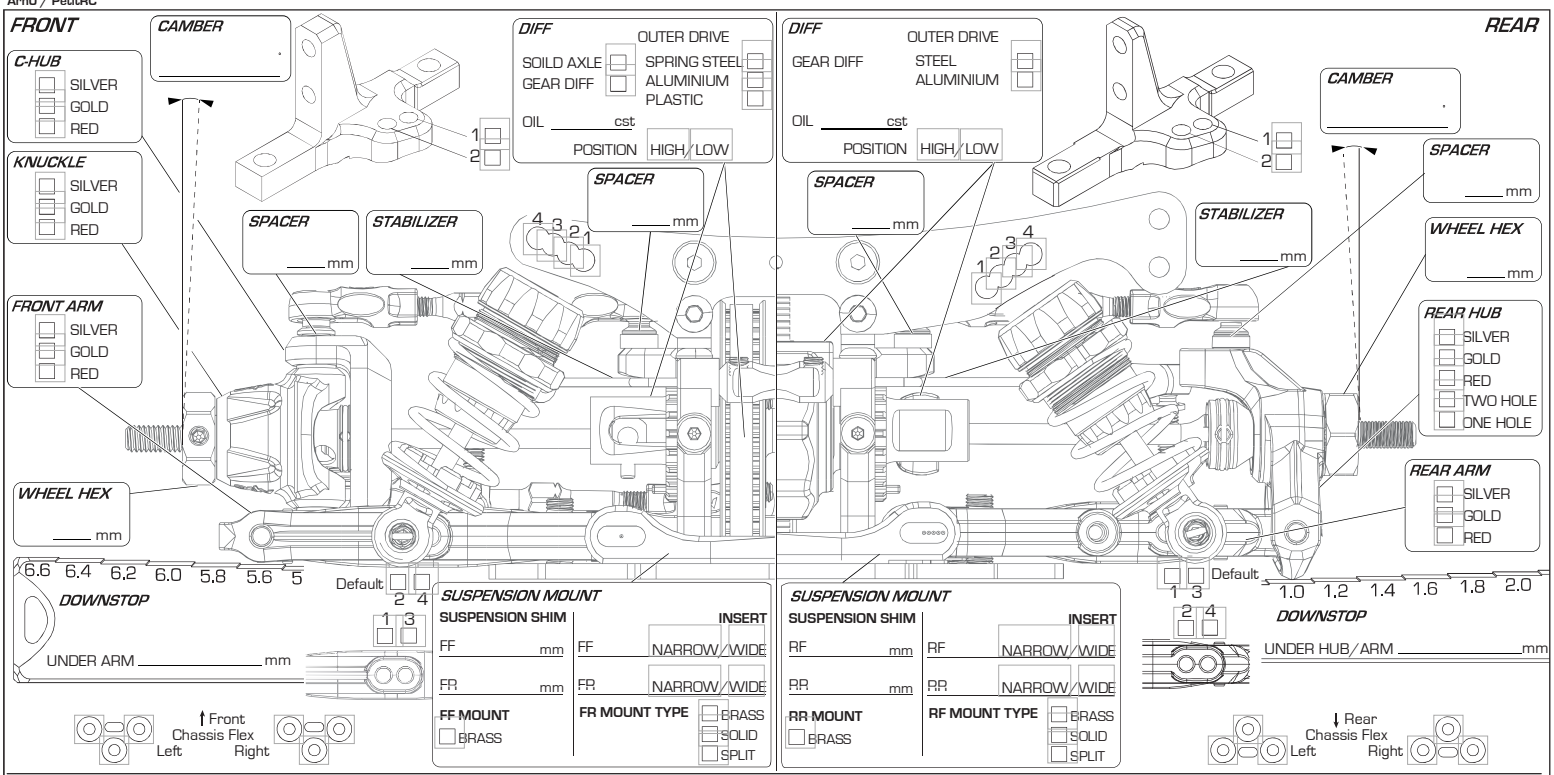

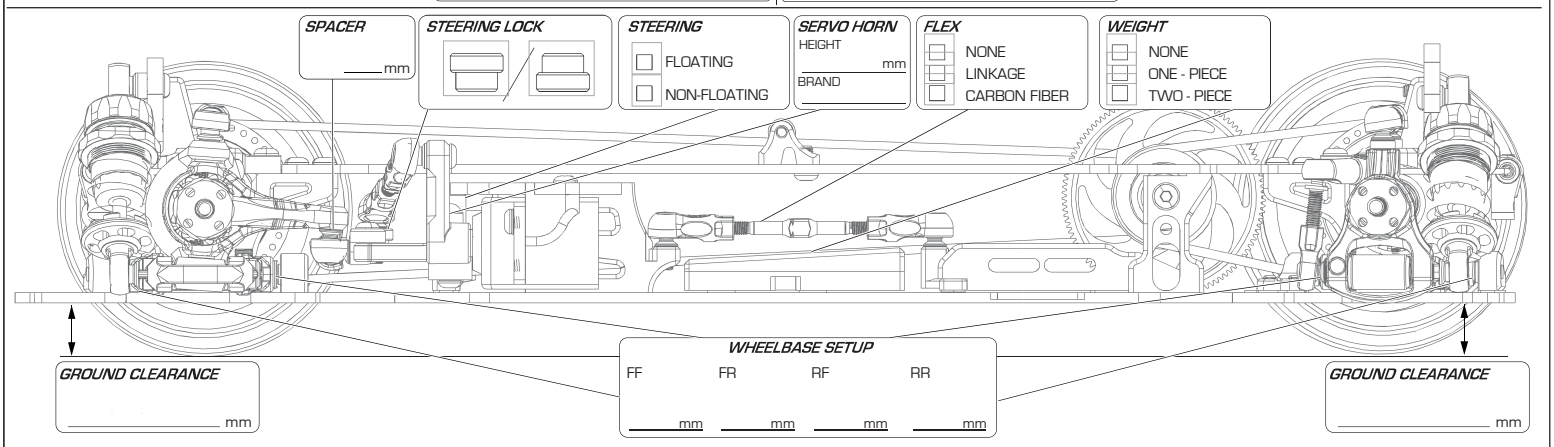

FRONT SHOCK	REAR SHOCK
PISTON 3 4 hole(s)	PISTON 3 4 hole(s)
OIL	OIL
SPRING	SPRING
SEALER CAP CLEAR / BLACK / BLUE / RED	SEALER CAP CLEAR / BLACK / BLUE / RED
REBOUND %	REBOUND %

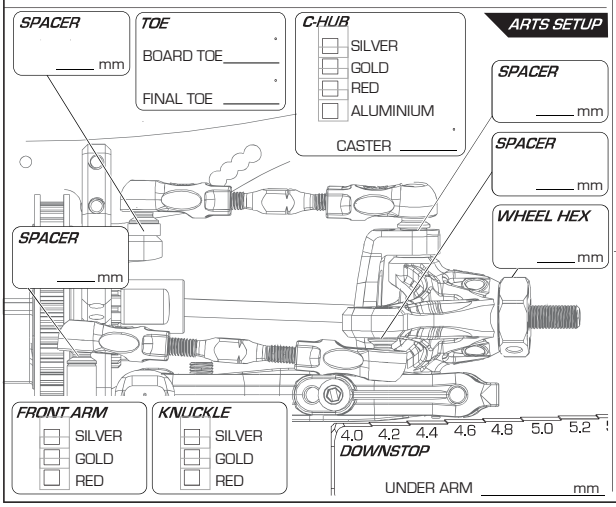

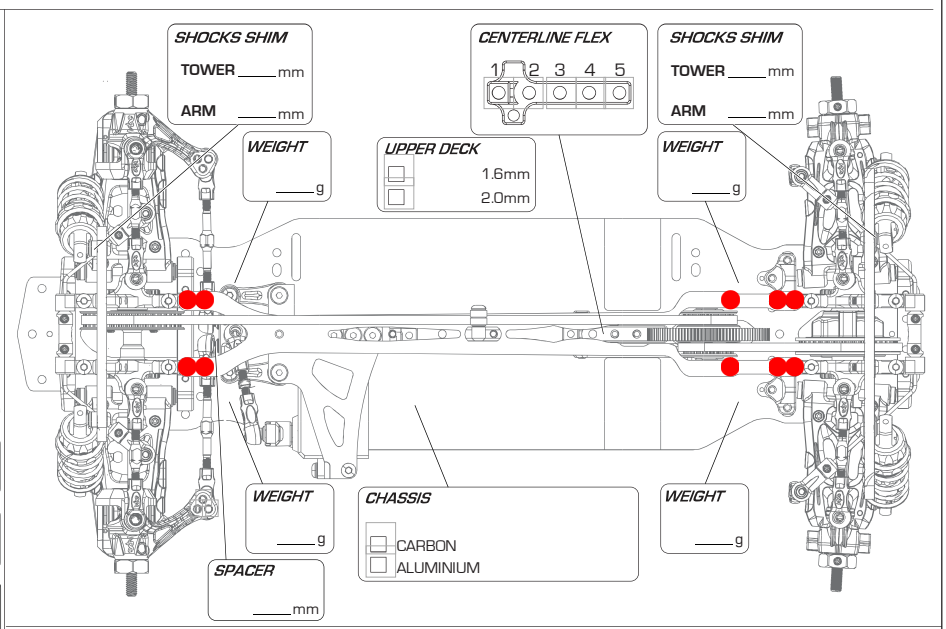

MOTOR	SPUR	T	PINION	T	PITCH	
TIRE	INSERT		WHEEL			
TIRE ADDITIVE	BODY		REAR WING			
ESC	BATTERY					