COMPETITION GRADE HIGH PERFORMANCE RADIO CONTROL RACING CAR CHASSIS KIT

LIGHTNING FXM

1/10 SCALE ELECTRIC COMPETITION FORMULA CAR KIT

SETUP SHEET

vbc racing

DRIVER _____ DATE _____

TRACK NAME _____ RESULT _____

TRACK SURFACE _____ (INDOOR / OUTDOOR) BEST LAP _____

HUMIDITY _____ TRACK TEMP _____

GRIP CONDITION _____ HI MED LOW _____

DEFAULT

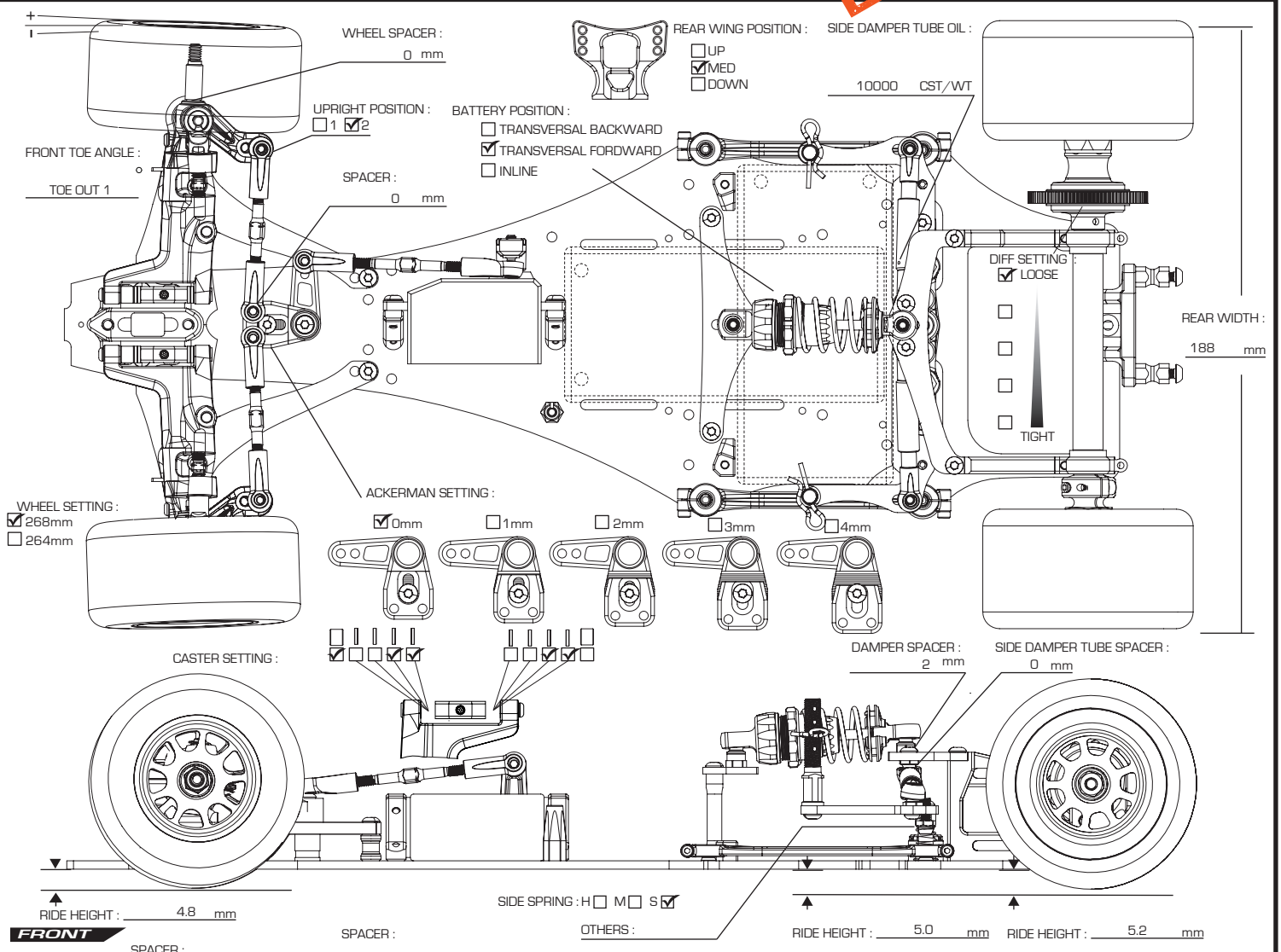

FRONT

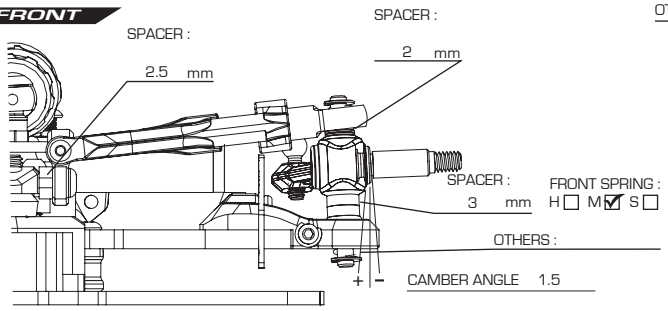

ACTIVE CASTER :

0 Deg ☑

5 Deg ☐

SHOCK

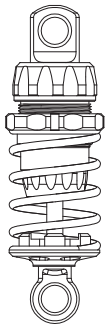

SHOCK LENGTH _____ mm

PISTON ☑ 4 hole(s) / OTHERS

OIL 500

SPRING RED

OIL SEALER CAP S / MS / ☑ / H

REBOUND 0 %

NOTES

FRONT TIRES

TIRE :

DIAMETER : mm

WHEEL :

TIRE TREATMENT :

TREATMENT TIME :

SURFACE TREATED :

NOTES :

REAR TIRES

TIRE :

DIAMETER : mm

WHEEL :

TIRE TREATMENT :

TREATMENT TIME :

SURFACE TREATED :

NOTES :

REAR AXLE

1mm 1 pcs

0.5mm _____ pcs

MOTOR : ROTOR : TIMING :

SPUR : PITCH/ T PINION : PITCH/ T ROLLOUT :

ESC : SETUP : BATTERY :

STEERING EXPO : BRAKE E.P. : THROTTLE EXPO :

BODY : WEIGHT :

REMARKS :