COMPETITION GRADE HIGH PERFORMANCE RADIO CONTROL RACING CAR CHASSIS KIT

LIGHTNING 12M

1/12 SCALE ELECTRIC COMPETITION CAR KIT

vbc racing

SETUP SHEET

Arn0

DRIVER: GARY LANZER | DATE: 09/29,30 - 10/01

TRACK: WCIC #1 | RESULT: 6TH OVERALL

ASPHALT / CARPET (✓) | INDOOR (✓) / OUTDOOR | BEST LAP

HUMIDITY | TRACK TEMP | AIR TEMP

GRIP: LOW | MEDIUM | HIGH (✓) | SURFACE: BUMPY | MEDIUM | SMOOTH (✓)

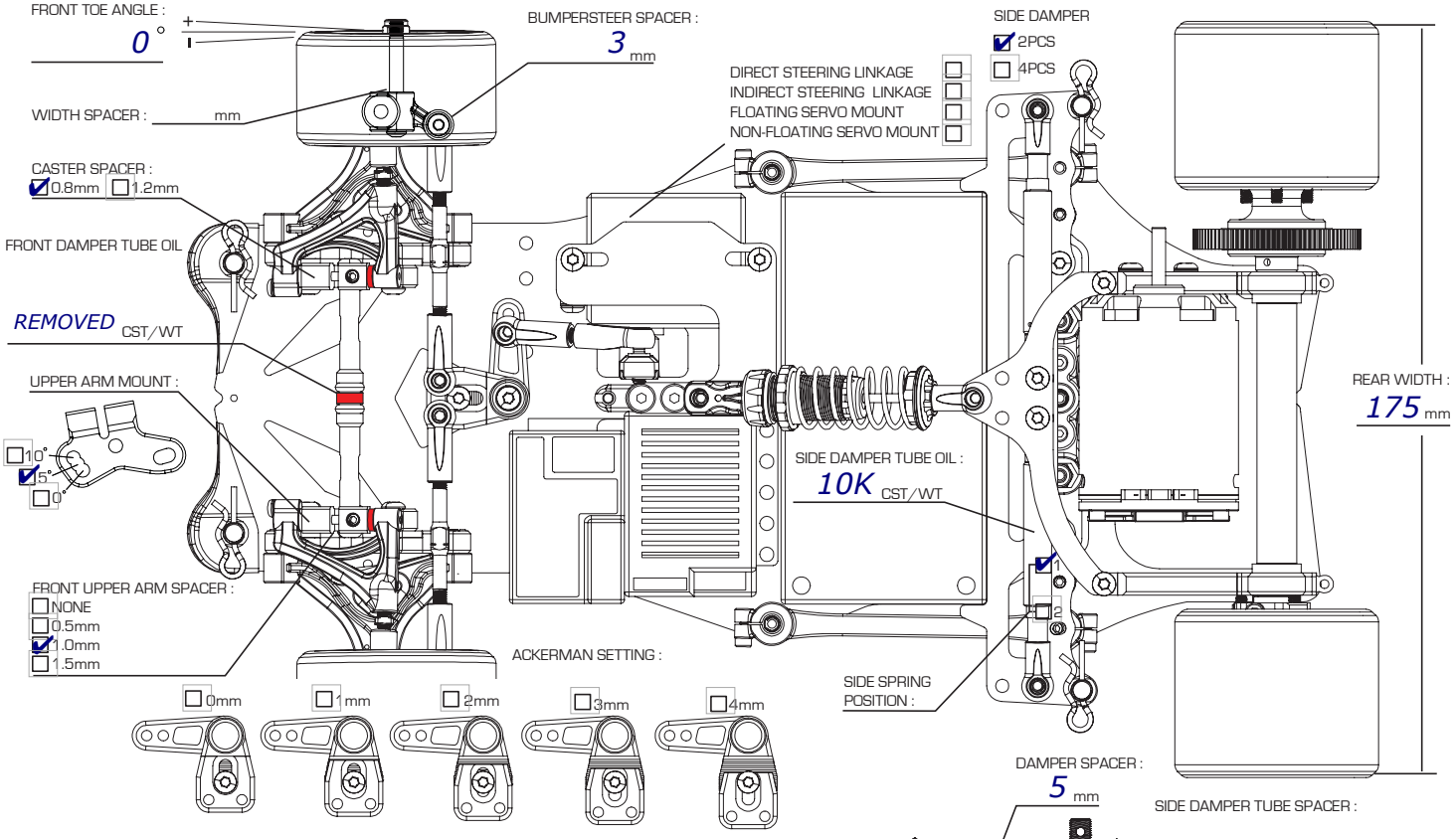

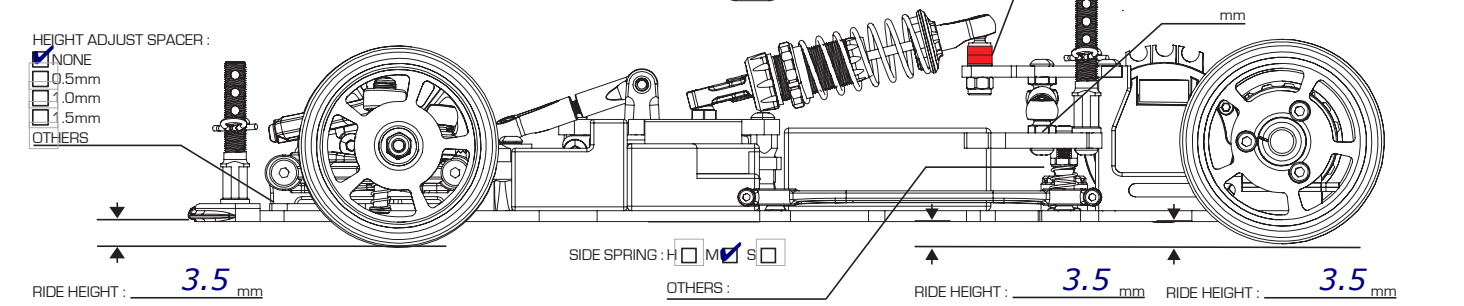

FRONT

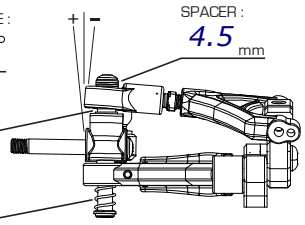

TBX SHOCK

SHOCK LENGTH : 0.05 DROOP mm

PISTON : 2 (✓) 3 ☐ HOLE(S) / OTHERS

OIL : 30 CST/WT

SPRING : H ☐ M (✓) S ☐ / OTHERS

REBOUND : 0 %

REAR AXLE

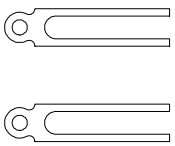

1mm 0 pcs

0.5mm 0 pcs

AXLE SHIMS : mm

FRONT TIRES

TIRE : CRC PURPLE STRIPE

DIAMETER : 40 mm

WHEEL : CRC

TIRE TREATMENT : GRAVITY

TREATMENT TIME : 10 MIN

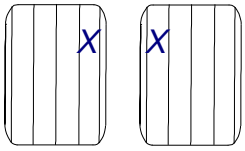

SURFACE TREATED :

NOTES :

REAR TIRES

TIRE : CRC PURPLE STRIPE

DIAMETER : 41 mm

WHEEL : CRC

TIRE TREATMENT : GRAVITY

TREATMENT TIME : 10 MIN

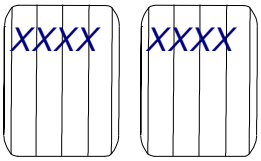

SURFACE TREATED :

NOTES :

MOTOR : R1 WURKS V15 | ROTOR : 12.5 | TIMING : 40*

SPUR : 78 PITCH/64 T | PINION : 51 PITCH/64 T | ROLLOUT :

ESC : TS 12TH | SETUP : | BATTERY : ORCA 6800

STEERING EXPO : | BRAKE E.P. : | THROTTLE EXPO :

BODY : PF | WEIGHT :

REMARKS : FLOATING DIRECT STEERING SERVO MOUNT

Editable by Arn0 at PetitRC.com