VELOX E9 EC LIMITED EDITION

ARNO

SHEPHERD
MICRO RACING TEAM

CASTER mm

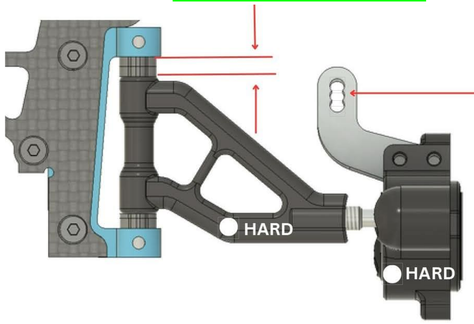

BUMP STEER mm

UPRIGHT INSERTS

CENTRIC ◯ EXCENTRIC ◯

FRONT ONE POSITION

HIGH

FRONT	210MM	210MM	207MM
	210MM	210MM	207MM

REAR

LOW

ACTIVE ◯ SHIM mm

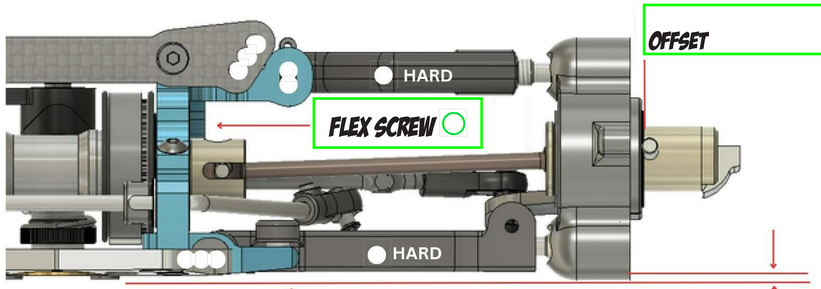

FLEX SCREW ◯

OFFSET mm

RIDE HEIGHT mm

DOWNSTOP mm

WHEELBASE

LONG ◯ SHORT ◯

TOE IN/OUT °

CAMBER LEFT °

WIDTH mm

CAMBER RIGHT °

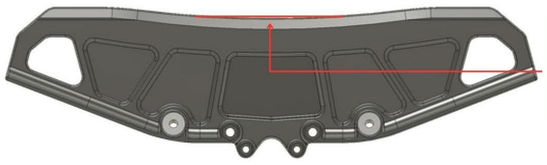

BODY

DISTANCE TO BUMPER mm

BATTERY PLACEMENT

- FRONT ◯
- MIDDLE ◯
- REAR ◯

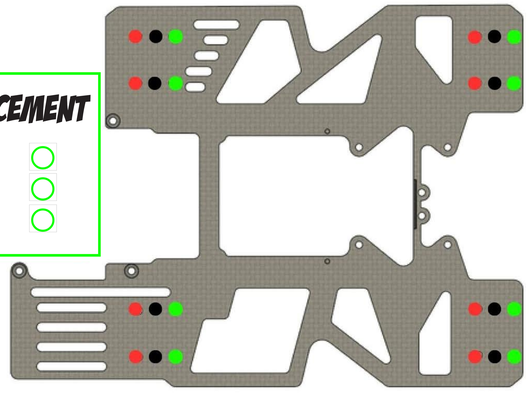

NAME	
DATE	
EVENT	
TRACK	
TEMP - AIR	TRACK
TRACTION	
LAYOUT	

TYRES

FRONT		REAR
LEFT / RIGHT		LEFT / RIGHT
	BRAND	
	SHORE	
	DIAMETER	
	ADDITIVE	

SHOCKS

SPRINGS
OIL
PISTON
REBOUND
FP SPRING

ANTI-ROLL BAR

FRONT mm REAR mm

FRONT AXLE

SOLID ◯ SPLIT ◯ 90 DEG ◯ STR ◯

ELECTRONICS

ESC
ESC SETTING
BATTERY
FAN

GEAR RATIO

/

SHIM mm

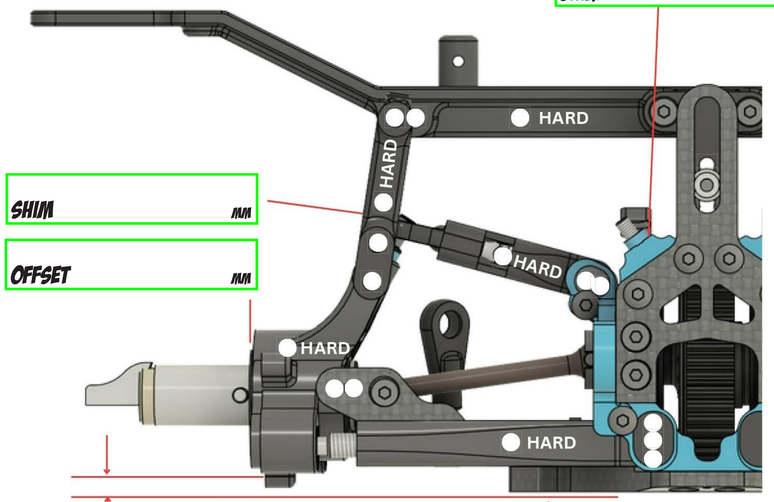

SHIM mm

OFFSET mm

DOWNSTOP mm

RIDE HEIGHT mm

CAMBER LEFT °

TOE IN/OUT °

CAMBER RIGHT °

WIDTH mm

LONG ◯
MEDIUM ◯
SHORT ◯

8MM ◯ 9MM ◯ 10MM ◯

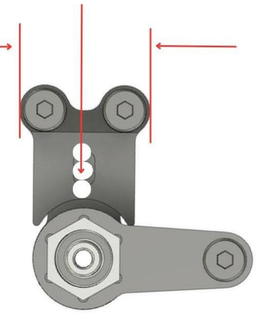

UPRIGHT INSERTS

F ◯ R ◯

AERO DISCS

F ◯ R ◯

MOTOR