SHEPHERD
MICRO RACING TEAM

VELOX 8.3

NAME	Tim Wood
DATE	August 2025
EVENT	EFRA European Championship
TRACK	Halifax, UK
AIR TEMP	24 Degrees
TRACTION	Medium-High
BEST LAP	13.5

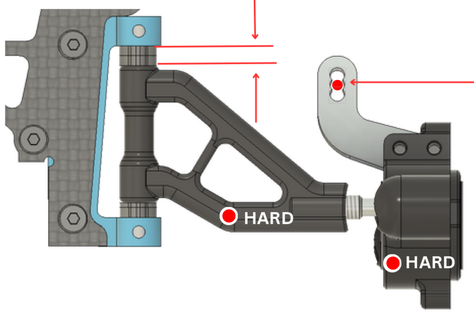

CASTER 3.0 mm

UPRIGHT INSERTS: CENTRIC ○ EXCENTRIC ✔

BUMP STEER 0.0 mm

FRONT ONEWAY POSITION

	HIGH		
BELT	210mm	210mm ✔	207mm
FRONT — REAR			
BELT	210mm	210mm	207mm
		LOW	

ACTIVE ○ SHIM ___ mm

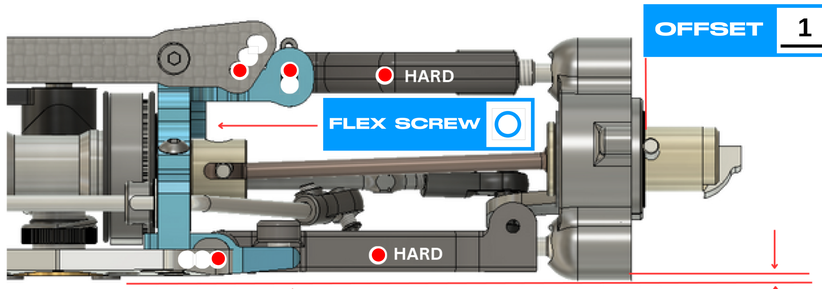

FLEX SCREW ○

OFFSET 1.0 mm

RIDE HEIGHT 7.8 mm

DOWNSTOP -1.0 mm

WHEELBASE: LONG ✔ SHORT ○

TOE IN/OUT -2.0°

CAMBER LEFT 2.0°

WIDTH 250.00 mm

CAMBER RIGHT 2.0°

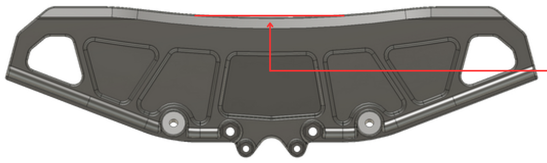

BODY: Blitz Spider

DISTANCE TO BUMPER: STD mm

AWS BATTERY TRAY ○

CARBON ○ BRASS ○ | CARBON ○ BRASS ○ | CARBON ✔ BRASS ○

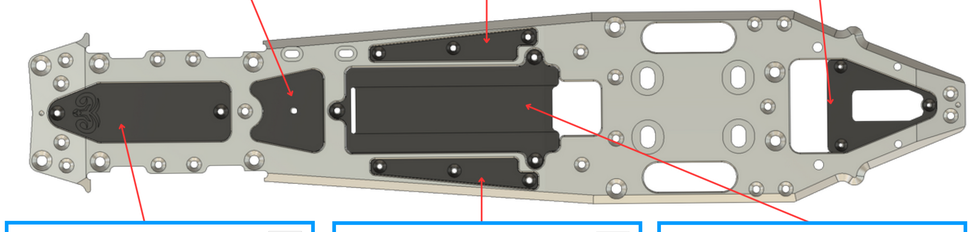

CARBON ✔ BRASS ○ | CARBON ○ BRASS ○ | CARBON ○ BRASS ✔

FRONT / REAR

FRONT LEFT	FRONT RIGHT		REAR LEFT	REAR RIGHT
Control	Hotrace	BRAND	Control	Hotrace
32	32	SHORE	35	35
69	69	DIAMETER	76	76
NA		ADDITIVE	NA	

SHOCKS

SMJ 8.0	SPRINGS	SMJ 6.1 Lefty
Shepherd 650	OIL	700
1.2mm	PISTON	1.0mm + 1.2mm
1	HOLE	2
Kit	FP SPRING	Kit

ANTI-ROLL BAR

FRONT 2.2 mm REAR 3.0 mm

FRONT AXLE

SOLID ○ SPLIT ● 90 DEG ○ STR ○

CLUTCH

TYPE	Shepherd Reverse
SHOE	Yellow
PRELOAD	1 Turn
GAP	0.6mm Total

GEAR RATIO

1ST 19 / 24 2ND 62 / 57

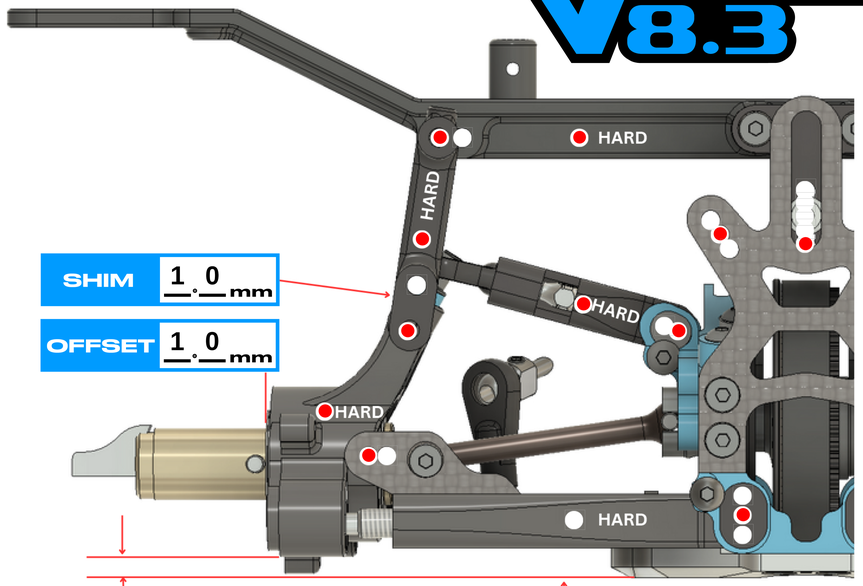

SHIM 1.0 mm

OFFSET 1.0 mm

DOWNSTOP 7.0 mm

RIDE HEIGHT 9.2 mm

CAMBER LEFT 3.5°

TOE IN/OUT 2.8°

CAMBER RIGHT 3.5°

WIDTH 261.00 mm

LONG ✔ MEDIUM ○ SHORT ○

8mm ○ 9mm ○ 10mm ●

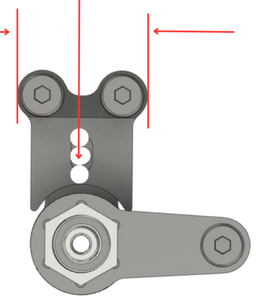

UPRIGHT INSERTS: F ○ R ●

AERO DISCS: F ✔ R ✔

ENGINE	Hasi Tuned 9R	PIPE	OS TR03 EFRA 2196
MANIFOLD	MR04	GLOWPLUG	
FUEL			

NOTES

Shepherd HT Radioplate - 908151
Shepherd 25g Chassis weight under radioplate bracket - 903104
LHO 10mm Ackerman Plate
Side Braces Disconnected
Shepherd Low Friction Belts & Pulleys - 900024 + 900020
Shepherd Carbon Steering Arms - 909313
Brilliant RC Aluminium Pivot Balls - BR1008 + BR1009
Brilliant RC TI Hinge Pins & Screw Set - BR600001T + BR700004B
Brilliant RC Hole Reinforcements & Fuel Filter - BR2005 + BR1010
Safetycarmodel - Proto Clutch Spring