SHEPHERD
MICRO RACING TEAM

VELOX 8.3

NAME	TIM WOOD
DATE	2025 Default Setup
EVENT	
TRACK	
AIR TEMP	
TRACTION	
BEST LAP	

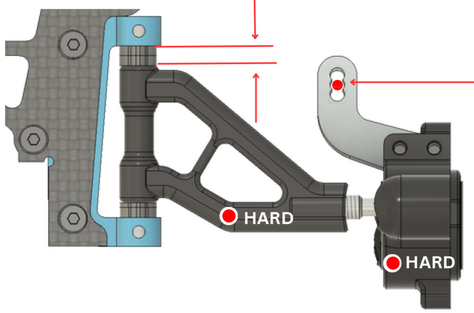

CASTER 4.0 mm

BUMP STEER 0.0 mm

UPRIGHT INSERTS

CENTRIC	EXCENTRIC
○	✔

FRONT ONEWAY POSITION

	HIGH		
BELT	210mm	210mm	207mm
FRONT — REAR			
BELT	210mm	210mm	207mm
		✔ LOW	

ACTIVE ○ SHIM ___ mm

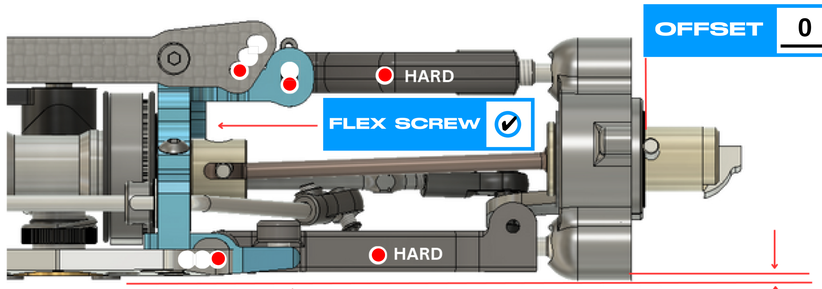

FLEX SCREW ✔

OFFSET 0.5 mm

RIDE HEIGHT 7.5 mm

DOWNSTOP 0.9 mm

WHEELBASE

LONG	SHORT
✔	○

TOE IN/OUT -1.0°

CAMBER LEFT 2.1°

WIDTH 250.5 mm

CAMBER RIGHT 1.9°

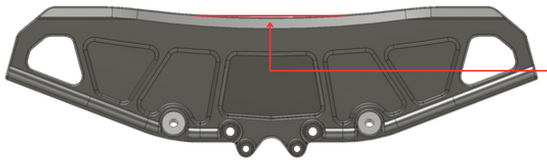

BODY Blitz Spider

DISTANCE TO BUMPER Std mm

AWS BATTERY TRAY ○

CARBON ○ BRASS ○ | CARBON ○ BRASS ○ | CARBON ○ BRASS ○

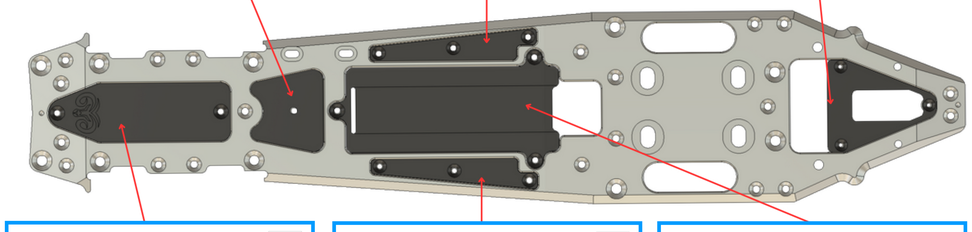

CARBON ○ BRASS ○ | CARBON ○ BRASS ○ | CARBON ○ BRASS ✔

FRONT / REAR

FRONT LEFT	FRONT RIGHT	TYRES	REAR LEFT	REAR RIGHT
Ulti	Ulti	BRAND	Ulti	Ulti
Inv Med	Inv Med	SHORE	Inv Med	Inv Med
69	69	DIAMETER	76	76
Yes		ADDITIVE	Yes	

SHOCKS

Kit	SPRINGS	Kit
700	OIL	700
1	PISTON	2
1.2	HOLE	1.2 + 1.1
Kit	FP SPRING	Kit

ANTI-ROLL BAR

FRONT 2.4 mm REAR 2.9 mm

FRONT AXLE

SOLID ○ SPLIT ● 90 DEG ○ STR ○

CLUTCH

TYPE	Shepherd Reverse
SHOE	Yellow
PRELOAD	Out 1 Turn
GAP	0.6mm

GEAR RATIO

1ST 19 / 62 2ND 24 / 57

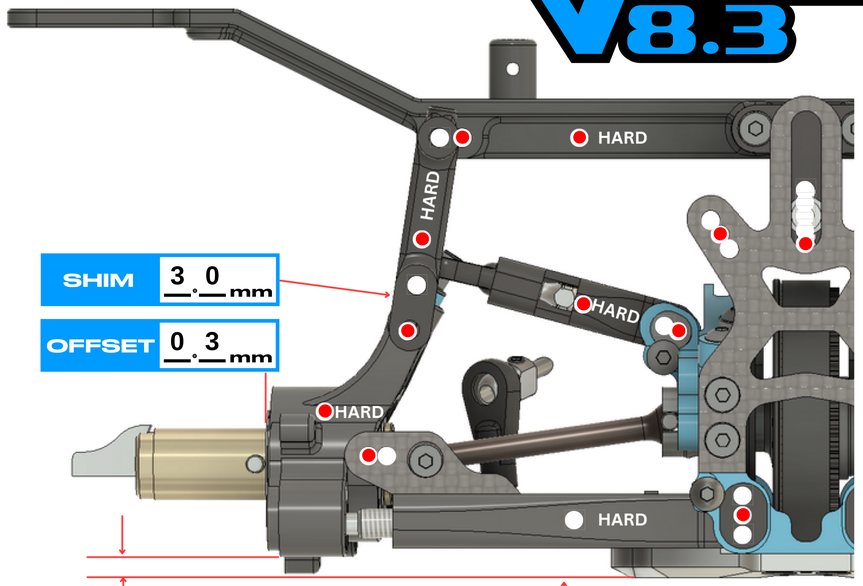

SHIM 3.0 mm

OFFSET 0.3 mm

DOWNSTOP 6.9 mm

RIDE HEIGHT 9.0 mm

CAMBER LEFT 3.2°

TOE IN/OUT 2.5°

CAMBER RIGHT 3.0°

WIDTH 260.0 mm

LONG	MEDIUM	SHORT
✔	○	○

8mm	9mm	10mm
○	○	●

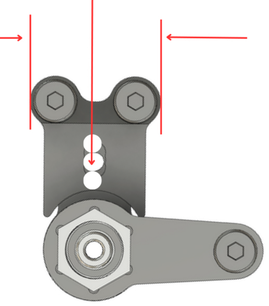

UPRIGHT INSERTS

F	R
○	◉

AERO DISCS

F	R
✔	✔

ENGINE	Hasi Tuned 9R	PIPE	Hasi Tuned 2174		
MANIFOLD	HT04	GLOWPLUG	7	FUEL	Elite 16%

NOTES

Rideheight on Hudy Gauges
BR600001T - Titanium Hinge Pin Set
BR1010 - Briliant RC Fuel Filter
BR1008 + BR1009 - Brilliant Alu Pivot Balls
BR700004 - TI Screwset