SHEPHERD
MICRO RACING TEAM

VELOX 8.3

NAME	Shepherd Default
DATE	
EVENT	
TRACK	
AIR TEMP	
TRACTION	
BEST LAP	

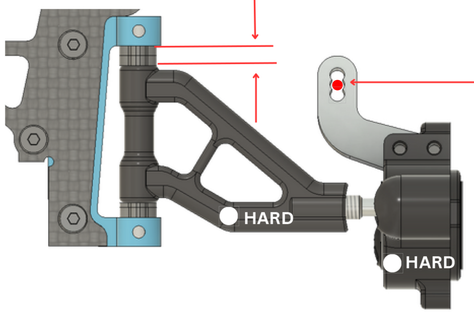

CASTER 4.0 mm

UPRIGHT INSERTS: CENTRIC ✔ EXCENTRIC ○

BUMP STEER 2.0 mm

FRONT ONEWAY POSITION

	HIGH ✔	
BELT 210mm	210mm	207mm
FRONT — REAR		
BELT 210mm	210mm	207mm
	LOW	

ACTIVE ○ SHIM ___ mm

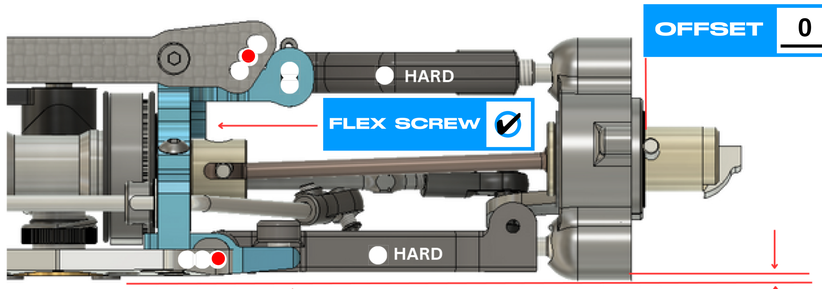

OFFSET 0.6 mm

FLEX SCREW ✔

RIDE HEIGHT 9.0 mm

DOWNSTOP 0.0 mm

WHEELBASE: LONG ✔ SHORT ○

TOE IN/OUT 1.0°

CAMBER LEFT 1.5°

WIDTH ___.___ mm

CAMBER RIGHT 1.5°

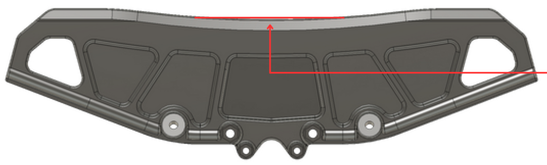

BODY

DISTANCE TO BUMPER ___ mm

AWS BATTERY TRAY ○

CARBON ○ BRASS ○ | CARBON ○ BRASS ○ | CARBON ○ BRASS ○

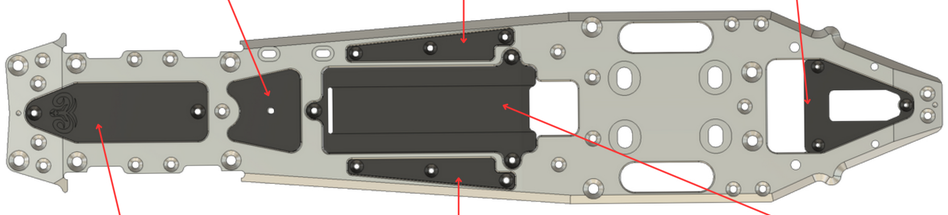

CARBON ○ BRASS ○ | CARBON ○ BRASS ○ | CARBON ○ BRASS ○

FRONT LEFT	FRONT RIGHT	TYRES	REAR LEFT	REAR RIGHT
		BRAND		
		SHORE		
		DIAMETER		
		ADDITIVE		

SHOCKS

Kit	SPRINGS	Kit
Kit 650cst	OIL	Kit 650cst
Std	PISTON	Std
1 x 1mm	HOLE	2 x 1mm
Kit	FP SPRING	Kit

ANTI-ROLL BAR

FRONT 2.6 mm REAR 2.6 mm

FRONT AXLE

SOLID ● SPLIT ○ 90 DEG ○ STR ●

CLUTCH

TYPE	Shepherd
SHOE	Yellow
PRELOAD	1.8mm
GAP	0.55mm

GEAR RATIO

1ST 20 / 61 2ND 25 / 57

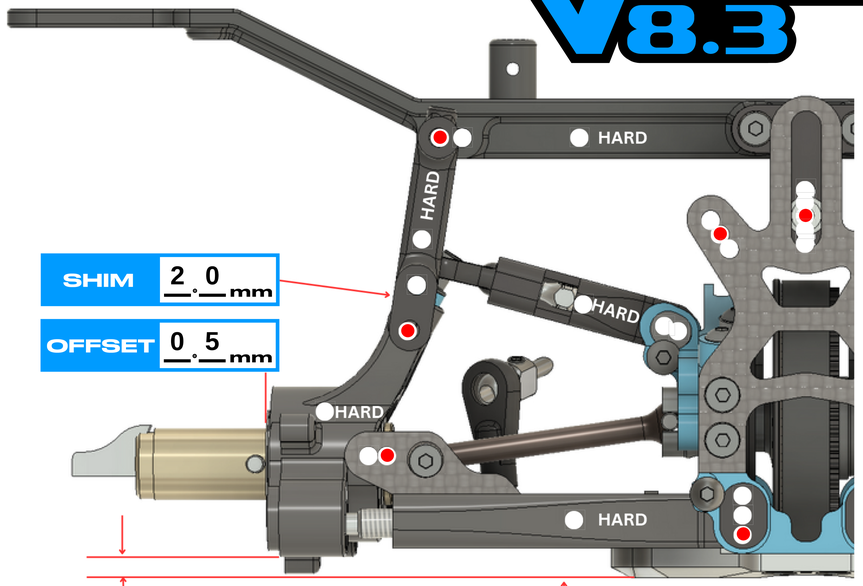

SHIM 2.0 mm

OFFSET 0.5 mm

DOWNSTOP 8.0 mm

RIDE HEIGHT 10.0 mm

CAMBER LEFT 3.0°

TOE IN/OUT 3.0°

CAMBER RIGHT 3.0°

WIDTH ___.___ mm

LONG ○ MEDIUM ✔ SHORT ○

8mm ● 9mm ○ 10mm ○

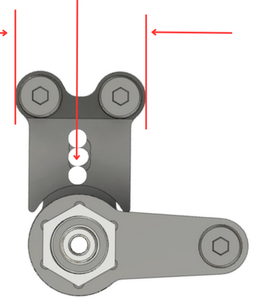

UPRIGHT INSERTS: F ○ R ○

AERO DISCS: F ○ R ○

ENGINE		PIPE			
MANIFOLD		GLOWPLUG		FUEL	

NOTES