SHEPHERD
MICRO RACING TEAM

VELOX 8.3

NAME	Shinya Shimazaki
DATE	06/4/2025
EVENT	practice
TRACK	IFS
AIR TEMP	18
TRACTION	Low
BEST LAP	13.895

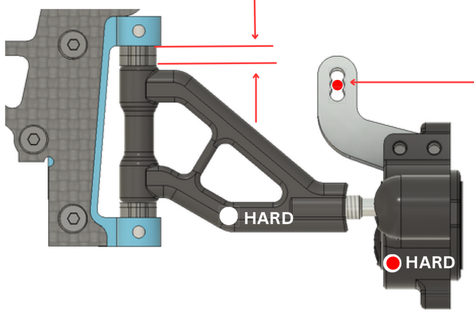

CASTER 3.0 mm

UPRIGHT INSERTS: CENTRIC ✔ / EXCENTRIC ○

BUMP STEER 0.0 mm

FRONT ONEWAY POSITION

	HIGH ✔	
BELT 210mm	210mm	207mm
FRONT — REAR		
BELT 210mm	210mm	207mm
	LOW	

ACTIVE ○ SHIM ___ mm

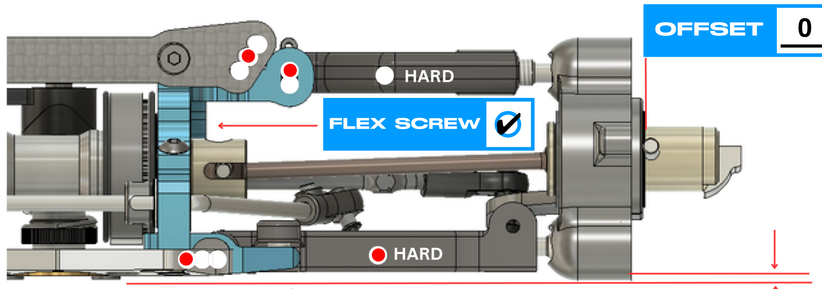

FLEX SCREW ✔

OFFSET 0.5 mm

RIDE HEIGHT 8.5 mm

DOWNSTOP 0.0 mm

TOE IN/OUT 1.5°

CAMBER LEFT 2.0°

WIDTH 250.0 mm

CAMBER RIGHT 2.0°

WHEELBASE: LONG ✔ / SHORT ○

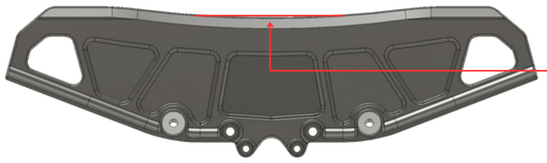

BODY HYPER Diablo

DISTANCE TO BUMPER 20 mm

AWS BATTERY TRAY ○

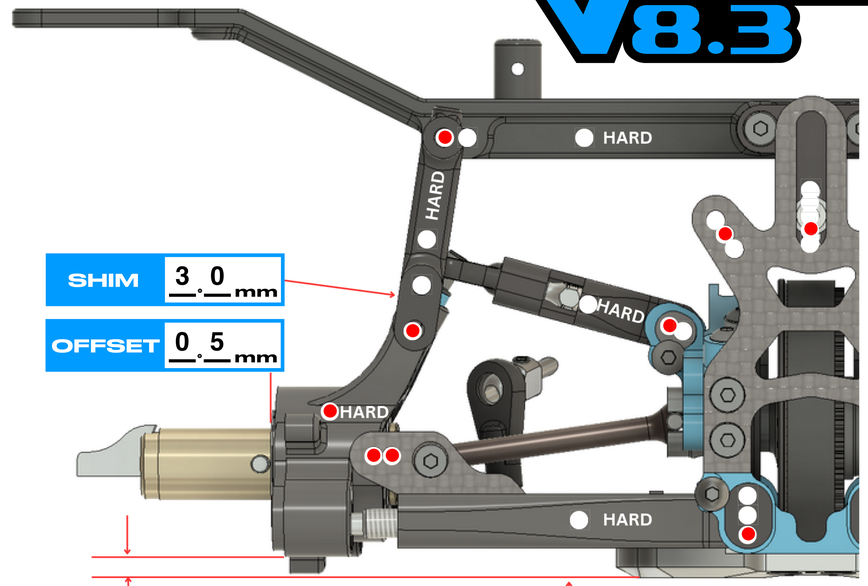

SHIM 3.0 mm

OFFSET 0.5 mm

DOWNSTOP 7.0 mm

RIDE HEIGHT 9.5 mm

CAMBER LEFT 3.0°

TOE IN/OUT 3.0°

CAMBER RIGHT 3.0°

WIDTH 260.0 mm

LONG ○
MEDIUM ○
SHORT ✔

8mm ○ 9mm ● 10mm ○

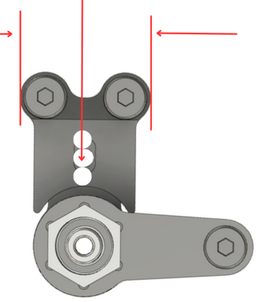

UPRIGHT INSERTS: F ○ R ●

AERO DISCS: F ○ R ✔

FRONT / REAR

FRONT LEFT	FRONT RIGHT		REAR LEFT	REAR RIGHT
Hotrace		BRAND	Hotrace	
30	30	SHORE	35	35
		DIAMETER		
		ADDITIVE		

SHOCKS

Mugen white	SPRINGS	Mugen white
MR33 700	OIL	MR33 700
1.3	PISTON	1.1
1	HOLE	2
soft	FP SPRING	soft

ANTI-ROLL BAR

FRONT 2.4 mm REAR 2.8 mm

FRONT AXLE

SOLID ○ SPLIT ○ 90 DEG ○ STR ○

CLUTCH

TYPE	Mugen
SHOE	Yellow
PRELOAD	0.3
GAP	0.6

GEAR RATIO

1ST 19 / 61 2ND 24 / 57

ENGINE	HASI Tuned R9	PIPE	HASI Tuned 2174HD		
MANIFOLD	HT03HD	GLOWPLUG	7	FUEL	RONY

NOTES

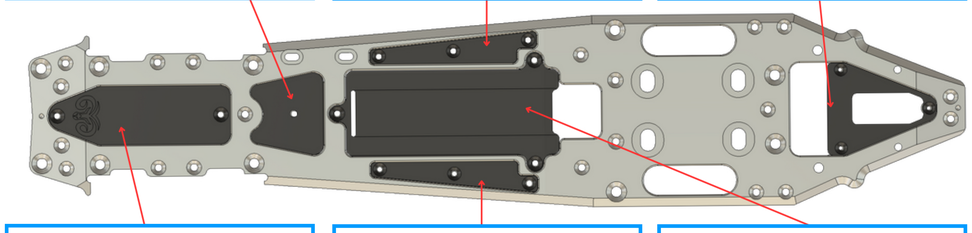

CARBON ○ BRASS ○ | CARBON ○ BRASS ○ | CARBON ○ BRASS ○

CARBON ○ BRASS ○ | CARBON ○ BRASS ○ | CARBON ○ BRASS ✔