SHEPHERD
MICRO RACING TEAM

VELOX 8.3

NAME	Rob Mckenna
DATE	15 Aug 2025
EVENT	EFRA 1/8 Track Euros
TRACK	Halifax UK
AIR TEMP	28 degrees C
TRACTION	
BEST LAP	15.45

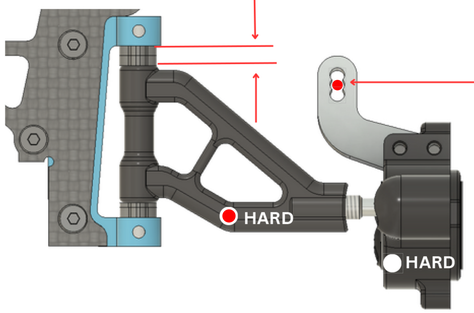

CASTER 5.0 mm

UPRIGHT INSERTS: CENTRIC ✔ / EXCENTRIC ○

BUMP STEER 1.0 mm

FRONT ONEWAY POSITION

	HIGH		
BELT	210mm	210mm	207mm
FRONT — REAR			
BELT	210mm	210mm	207mm
		LOW	

ACTIVE ○ SHIM ___ mm

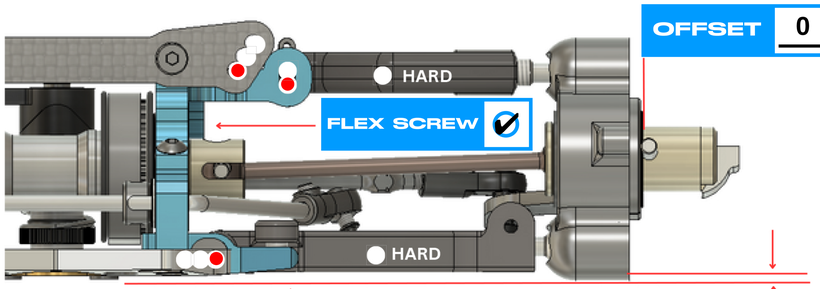

FLEX SCREW ✔

OFFSET 0.5 mm

RIDE HEIGHT 7.5 mm

DOWNSTOP 0.0 mm

WHEELBASE: LONG ✔ / SHORT ○

TOE IN/OUT 2.0°

CAMBER LEFT 2.0°

WIDTH 251.0 mm

CAMBER RIGHT 2.0°

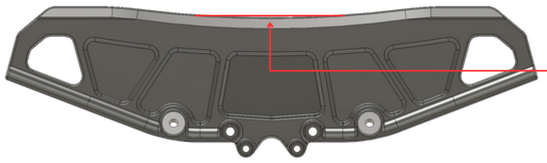

BODY: Blitz Spyder

DISTANCE TO BUMPER std mm

AWS BATTERY TRAY ○

CARBON ○ BRASS ○ | CARBON ✔ BRASS ○ | CARBON ○ BRASS ○

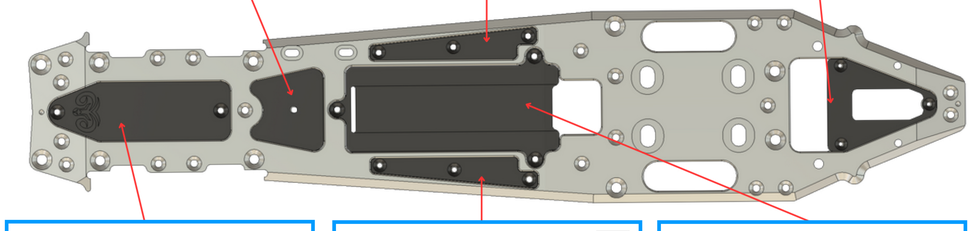

CARBON ○ BRASS ✔ | CARBON ○ BRASS ○ | CARBON ○ BRASS ✔

FRONT / REAR

FRONT LEFT	FRONT RIGHT	TYRES	REAR LEFT	REAR RIGHT
Hot Race	Hot Race	BRAND	Hot Race	Hot Race
32	32	SHORE	35	35
69	69	DIAMETER	76	76
NO		ADDITIVE	NO	

SHOCKS

v8.2 Kit std	SPRINGS	V8.2 Kit std
700	OIL	700
1x 1.2	PISTON	2x 1.2
1	HOLE	2
Kit std	FP SPRING	Kit std

ANTI-ROLL BAR

FRONT 2.4 mm REAR 2.8 mm

FRONT AXLE

SOLID ○ SPLIT ● 90 DEG ○ STR ○

CLUTCH

TYPE	Shepherd Reverse
SHOE	Yellow
PRELOAD	1 1/4 turn out
GAP	0.6mm

GEAR RATIO

1ST 19 / 62 2ND 24 / 57

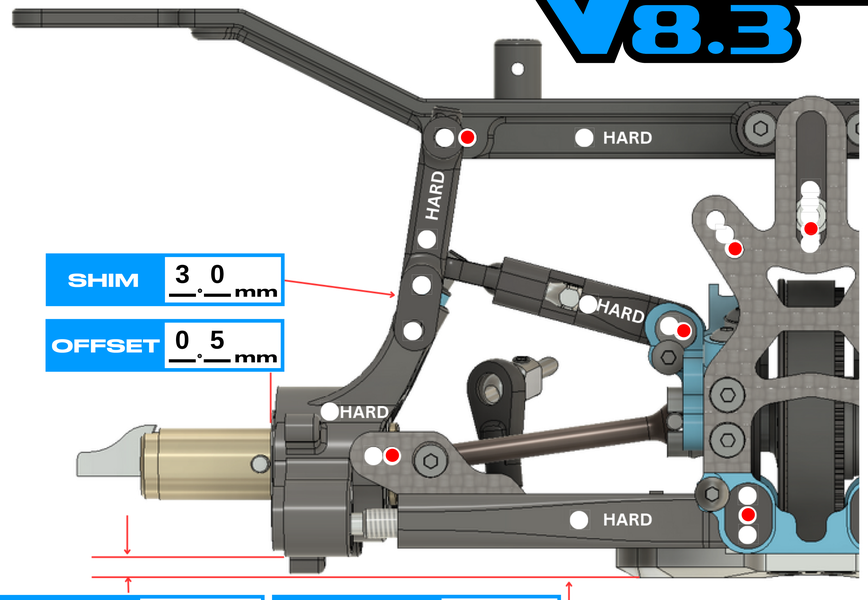

SHIM 3.0 mm

OFFSET 0.5 mm

DOWNSTOP 7.0 mm

RIDE HEIGHT 9.0 mm

CAMBER LEFT 3.0°

TOE IN/OUT 3.0°

CAMBER RIGHT 3.0°

WIDTH 261.0 mm

LONG ✔ / MEDIUM ○ / SHORT ○

8mm ● 9mm ○ 10mm ○

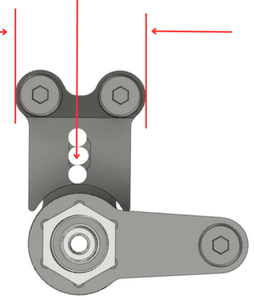

UPRIGHT INSERTS: F ○ R ●

AERO DISCS: F ○ R ✔

ENGINE	OS Speed R2105	PIPE	EFRA 2196		
MANIFOLD	MR02	GLOWPLUG	No7	FUEL	Elite 16%

NOTES

Carbon Steering Arms

Brilliant Aluminium Pivot Balls

Carbon Front Bodymount Brace

Both Rear Carbon engine Stiffeners/Braces fitted

Front Drive Belt 207mm