SHEPHERD
MICRO RACING TEAM

VELOX 8.3

NAME	Rasmus Askrot
DATE	250920
EVENT	Swedish cup
TRACK	Eskilstuna
AIR TEMP	18 degree
TRACTION	Medium
BEST LAP	

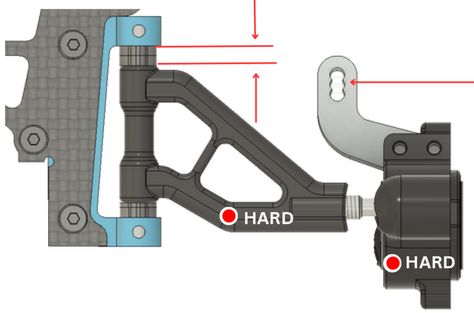

CASTER 4.0 mm

UPRIGHT INSERTS: CENTRIC ○ EXCENTRIC ✔

BUMP STEER 0.0 mm

FRONT ONEWAY POSITION

	HIGH ✔	
BELT	210mm	207mm
FRONT — REAR		
BELT	210mm	207mm
	LOW	

ACTIVE ○ SHIM ___ mm

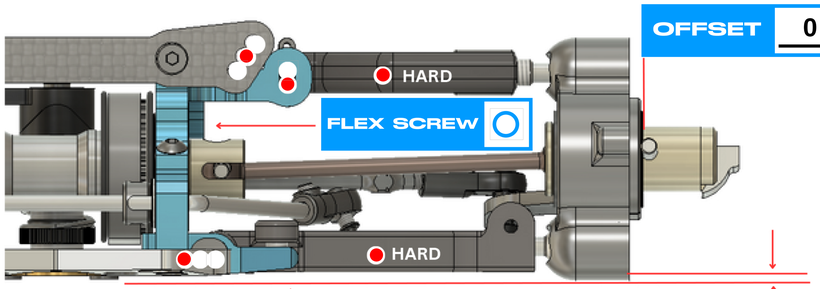

OFFSET 0.5 mm

FLEX SCREW ○

RIDE HEIGHT 8.0 mm

DOWNSTOP 0.0 mm

WHEELBASE: LONG ○ SHORT ✔

TOE IN/OUT 1.0°

CAMBER LEFT 2.0°

WIDTH 250.0 mm

CAMBER RIGHT 2.0°

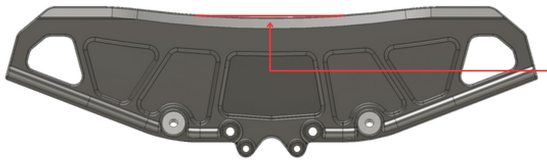

BODY: Hyper Diabla

DISTANCE TO BUMPER ___ mm

AWS BATTERY TRAY ○

CARBON ○ BRASS ○ | CARBON ✔ BRASS ○ | CARBON ○ BRASS ○

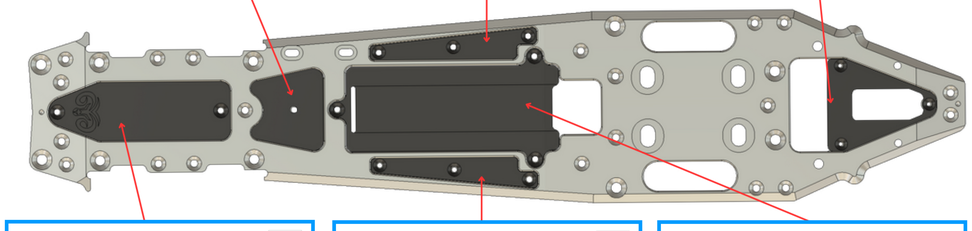

CARBON ✔ BRASS ○ | CARBON ✔ BRASS ○ | CARBON ○ BRASS ✔

FRONT LEFT	FRONT RIGHT	TYRES	REAR LEFT	REAR RIGHT
		BRAND		
		SHORE		
		DIAMETER		
		ADDITIVE		

SHOCKS

Capricorn blue/white	SPRINGS	Serpent pink
600	OIL	700
STD	PISTON	STD
1x1.2	HOLE	2x1.2
soft	FP SPRING	soft

ANTI-ROLL BAR

FRONT 2.3 mm REAR 2.8 mm

FRONT AXLE

SOLID ☐ SPLIT ☐ 90 DEG ☐ STR ☐

CLUTCH

TYPE	STD
SHOE	STD
PRELOAD	1.8mm BM
GAP	0.65

GEAR RATIO

1ST 20 / 62 2ND 25 / 57

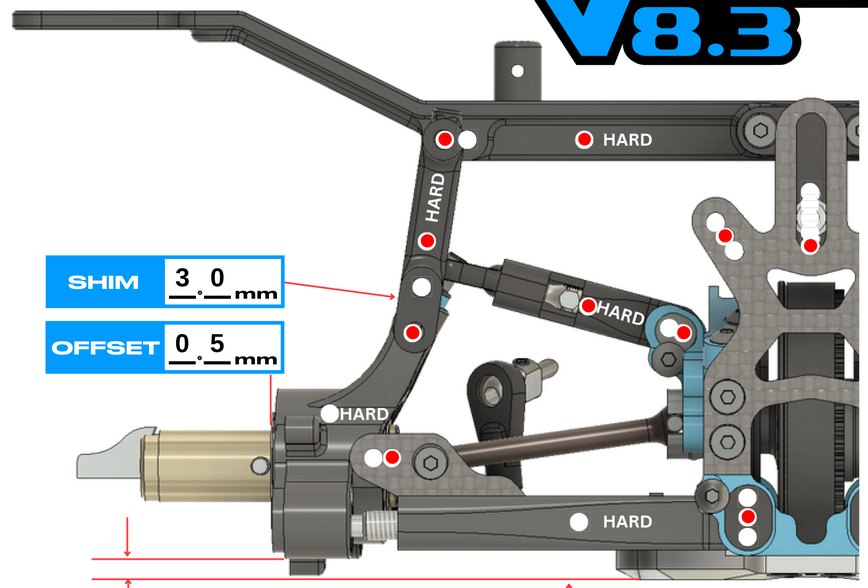

SHIM 3.0 mm

OFFSET 0.5 mm

DOWNSTOP 9.0 mm

RIDE HEIGHT 9.0 mm

CAMBER LEFT 3.5°

TOE IN/OUT 3.0°

CAMBER RIGHT 3.5°

WIDTH 261.0 mm

LONG ○ MEDIUM ✔ SHORT ○

8mm ☐ 9mm ☐ 10mm ●

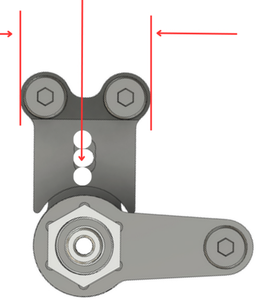

UPRIGHT INSERTS: F ○ R ○

AERO DISCS: F ○ R ○

ENGINE	XRD AAC	PIPE	XRD		
MANIFOLD	XRD	GLOWPLUG	RP7	FUEL	Energy

NOTES

Narrow front tower.
30g in front of engine.
Rear arms moved forward 1.5mm for shorter wheelbase.
Camber-link set V8.2 SH900018.
SH700050 and SH700052 pivotballs.
SH909313
SH908141 V8.2 Radioplate.