SHEPHERD
MICRO RACING TEAM

VELOX 8.3

NAME	Rasmus Askrot
DATE	250712
EVENT	Test
TRACK	Örebro Sweden
AIR TEMP	
TRACTION	Medium
BEST LAP	

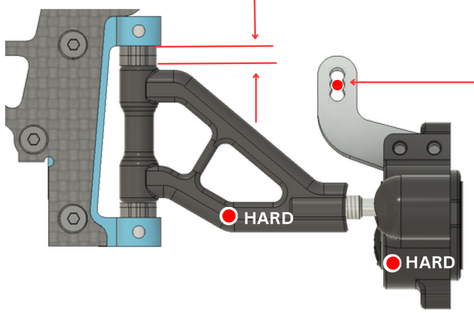

CASTER 4.0 mm

UPRIGHT INSERTS: CENTRIC ○ EXCENTRIC ✔

BUMP STEER 0 mm

FRONT ONEWAY POSITION

	HIGH		
BELT	210mm	210mm ✔	207mm
FRONT — REAR			
BELT	210mm	210mm	207mm
		LOW	

ACTIVE ○ SHIM ___ mm

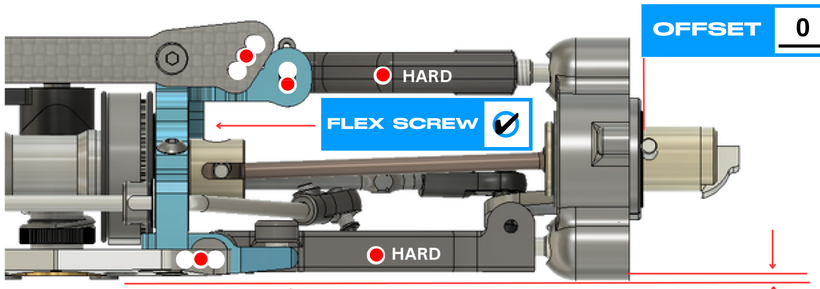

FLEX SCREW ✔

OFFSET 0.5 mm

RIDE HEIGHT 8.0 mm

DOWNSTOP 0 mm

WHEELBASE: LONG ✔ SHORT ○

TOE IN/OUT 1.0°

CAMBER LEFT 2.0°

WIDTH 250.5 mm

CAMBER RIGHT 2.0°

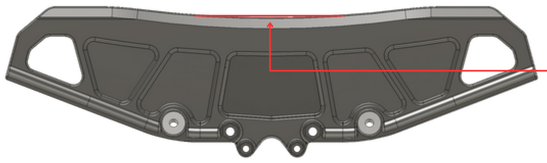

BODY: Hyper Diablo

DISTANCE TO BUMPER ___ mm

AWS BATTERY TRAY ○

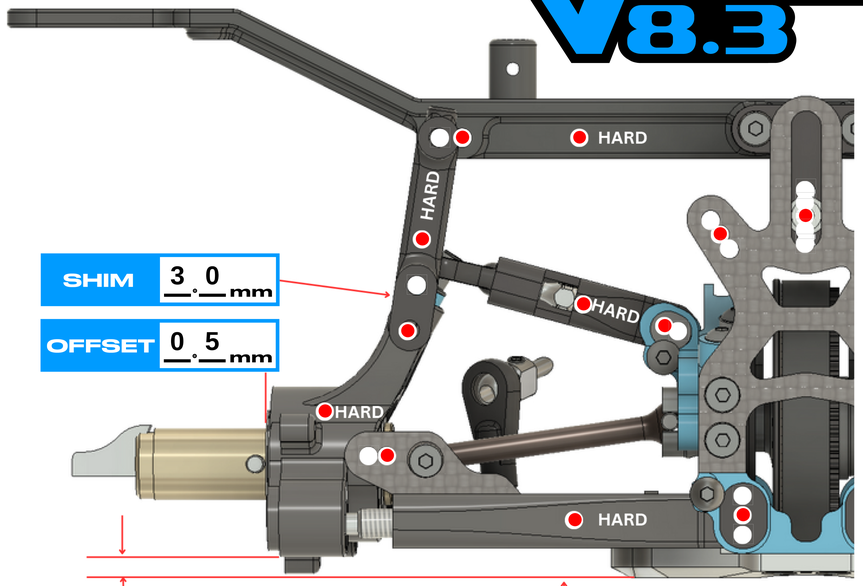

SHIM 3.0 mm

OFFSET 0.5 mm

DOWNSTOP 8.0 mm

RIDE HEIGHT 9.0 mm

CAMBER LEFT 3.2°

CAMBER RIGHT 3.2°

TOE IN/OUT 3.0°

WIDTH 260.5 mm

LONG ○ MEDIUM ✔ SHORT ○

8mm ○ 9mm ○ 10mm ●

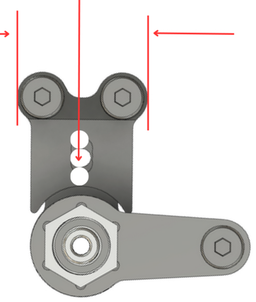

UPRIGHT INSERTS: F ○ R ○

AERO DISCS: F ○ R ○

FRONT / REAR

FRONT LEFT	FRONT RIGHT	TYRES	REAR LEFT	REAR RIGHT
		BRAND		
		SHORE		
		DIAMETER		
		ADDITIVE		

SHOCKS

Capricorn blue/white	SPRINGS	Serpent pink
600	OIL	600
std	PISTON	std
1x1.2	HOLE	1x1.0 + 1x1.2
std	FP SPRING	std

ANTI-ROLL BAR

FRONT 2.4 mm REAR 2.8 mm

FRONT AXLE

SOLID ○ SPLIT ○ 90 DEG ○ STR ○

CLUTCH

TYPE	std
SHOE	std
PRELOAD	1.6mm BM
GAP	0.6

GEAR RATIO

1ST 19 / 62 2ND 24 / 57

ENGINE	DB engine	PIPE	DB engine		
MANIFOLD	DB engine	GLOWPLUG	Rp7	FUEL	Energy

NOTES

Rear lower and upper arms moved 2mm forward,
We grind 2mm in front of the arms and add a 2mm shim behind.
Also make sure that 1:st gear not touch right arm!

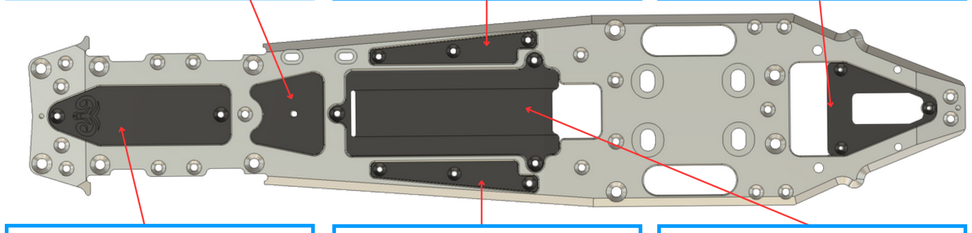

CARBON ○ BRASS ○ | CARBON ✔ BRASS ○ | CARBON ○ BRASS ○

CARBON ○ BRASS ✔ | CARBON ✔ BRASS ○ | CARBON ○ BRASS ✔