SHEPHERD
MICRO RACING TEAM

VELOX 8.3

NAME	Friedrich
DATE	11.5.25
EVENT	SK West
TRACK	Bad Breisig
AIR TEMP	23
TRACTION	Medium
BEST LAP	14,5

CASTER 4.0 mm

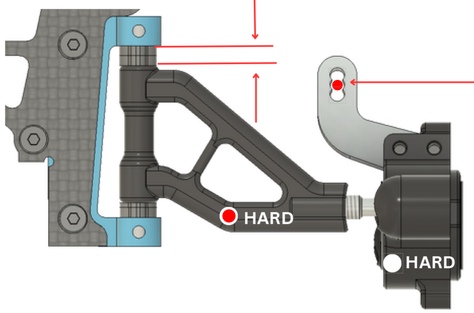

UPRIGHT INSERTS: CENTRIC ○ EXCENTRIC ✔

BUMP STEER 0.0 mm

FRONT ONEWAY POSITION

	HIGH		
BELT	210mm ○	210mm ●	207mm ○
FRONT — REAR			
BELT	210mm ○	210mm ●	207mm ✔
		LOW ○	

ACTIVE ○ SHIM ___ mm

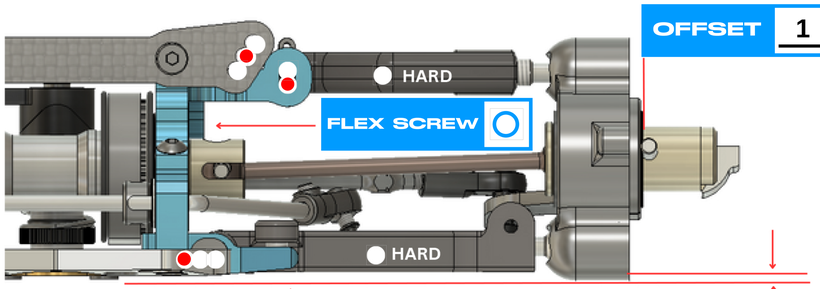

FLEX SCREW ○

OFFSET 1.0 mm

RIDE HEIGHT 8.0 mm

DOWNSTOP 8.0 mm

WHEELBASE: LONG ○ SHORT ✔

TOE IN/OUT 1.5°

CAMBER LEFT 1.5°

WIDTH 251 mm

CAMBER RIGHT 2.5°

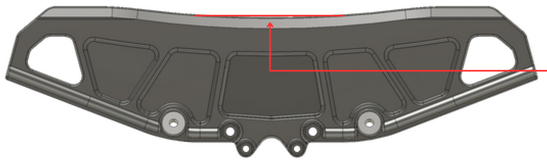

BODY: Diablo

DISTANCE TO BUMPER: PC mm

AWS BATTERY TRAY ✔

CARBON ✔ BRASS ○ | CARBON ✔ BRASS ○ | CARBON ○ BRASS ○

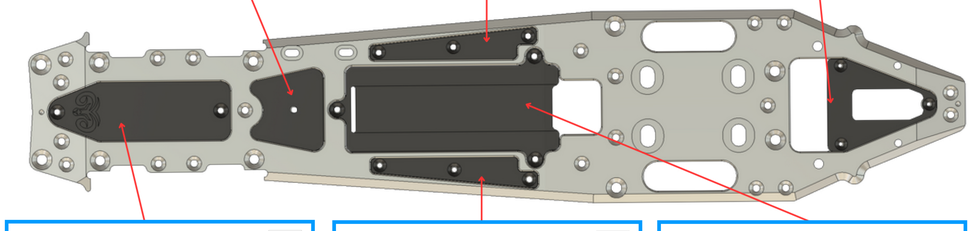

CARBON ○ BRASS ○ | CARBON ✔ BRASS ○ | CARBON ○ BRASS ✔

FRONT / REAR

FRONT LEFT	FRONT RIGHT	TYRES	REAR LEFT	REAR RIGHT
Enneti	Enneti	BRAND	Enneti	Enneti
32	32	SHORE	35	35
69	69	DIAMETER	76	76
		ADDITIVE		

SHOCKS

Mugen weiß	SPRINGS	Mugen Weiß
650	OIL	800
	PISTON	
1x1.2	HOLE	2x1.2
Std	FP SPRING	Std

ANTI-ROLL BAR

FRONT 2,4 mm REAR 2,6 mm

FRONT AXLE

SOLID ○ SPLIT ○ 90 DEG ○ STR ●

CLUTCH

TYPE	Std.
SHOE	Yellow
PRELOAD	BM 1.3
GAP	0,6

GEAR RATIO

1ST 18 / 24 2ND 61 / 57

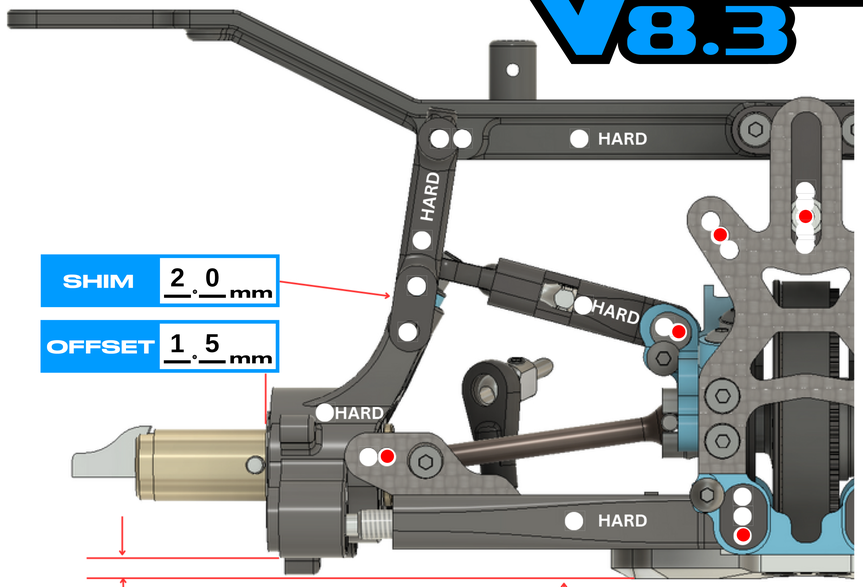

SHIM 2.0 mm

OFFSET 1.5 mm

DOWNSTOP 8.0 mm

RIDE HEIGHT 9.0 mm

CAMBER LEFT 3.0°

TOE IN/OUT 3.0°

CAMBER RIGHT 3.0°

WIDTH 262 mm

LONG ○ MEDIUM ✔ SHORT ○

8mm ○ 9mm ● 10mm ○

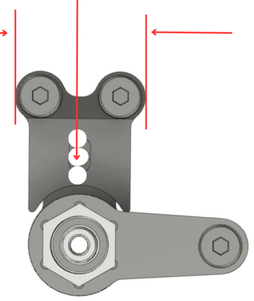

UPRIGHT INSERTS: F ○ R ◉

AERO DISCS: F ✔ R ○

ENGINE	PSS Picco	PIPE	2069
MANIFOLD		GLOWPLUG	
FUEL			

NOTES