SHEPHERD
MICRO RACING TEAM

VELOX 8.3

NAME	Lee Palmer
DATE	5th July 2025
EVENT	British National
TRACK	Cotswo
AIR TEMP	
TRACTION	
BEST LAP	

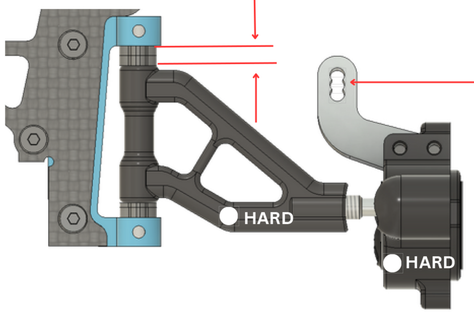

CASTER 5.0 mm

UPRIGHT INSERTS: CENTRIC ○ EXCENTRIC ✔

BUMP STEER 0.0 mm

FRONT ONEWAY POSITION

	HIGH		
BELT	210mm	210mm	207mm
FRONT — REAR			
BELT	210mm ✔	210mm	207mm
		LOW	

ACTIVE ○ SHIM ___ mm

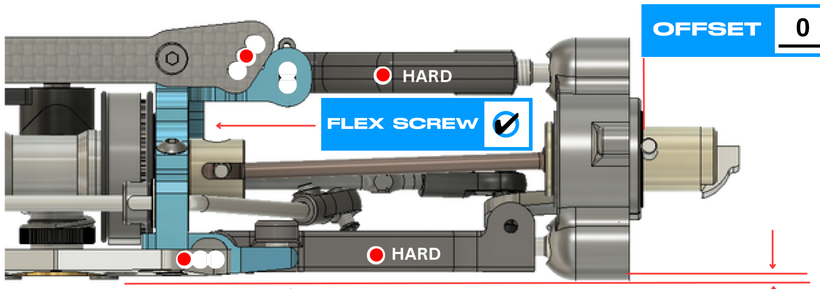

FLEX SCREW ✔

OFFSET 0.5 mm

RIDE HEIGHT 8.0 mm

DOWNSTOP 1.0 mm

WHEELBASE: LONG ○ SHORT ✔

TOE IN/OUT 1.0°

CAMBER LEFT 2.0°

WIDTH 252.0 mm

CAMBER RIGHT 2.0°

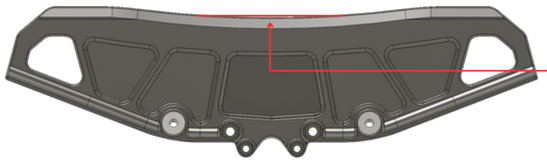

BODY: Blitz Spider

DISTANCE TO BUMPER 13 mm

AWS BATTERY TRAY ○

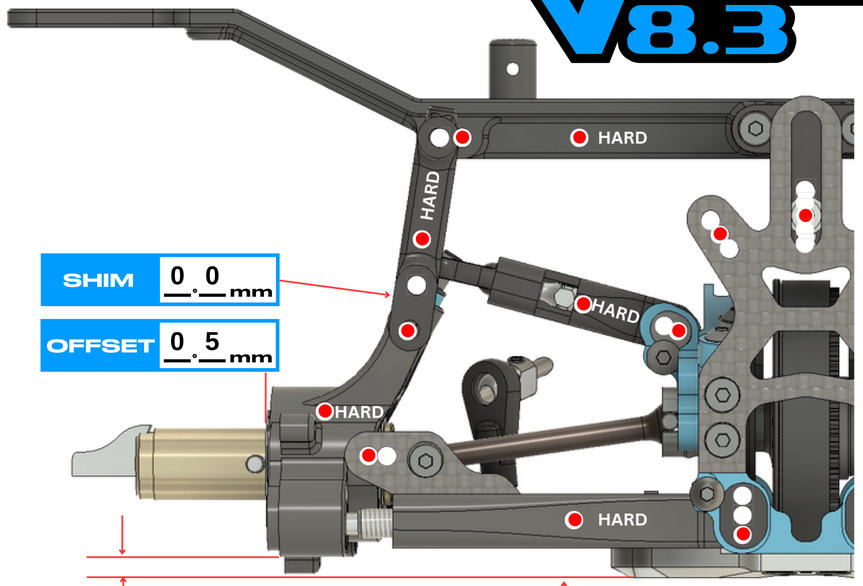

SHIM 0.0 mm

OFFSET 0.5 mm

DOWNSTOP 7.0 mm

RIDE HEIGHT 9.0 mm

CAMBER LEFT 3.0°

TOE IN/OUT 3.0°

CAMBER RIGHT 3.0°

WIDTH 262 mm

LONG ✔
MEDIUM ○
SHORT ○

8mm ○ 9mm ○ 10mm ●

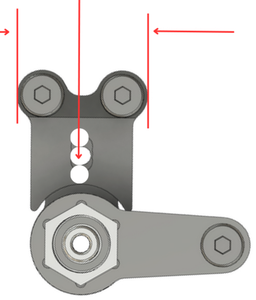

UPRIGHT INSERTS: F ○ R ○

AERO DISCS: F ○ R ○

FRONT / REAR

FRONT LEFT	FRONT RIGHT		REAR LEFT	REAR RIGHT
Hot Race	Hot Race	TYRES BRAND	Hot Rcae	Hot Race
		SHORE		
69	69	DIAMETER	76	76
		ADDITIVE		

SHOCKS

White	SPRINGS	White
700	OIL	700
1.2	PISTON	1.2
1	HOLE	2
kit	FP SPRING	kit

ANTI-ROLL BAR

FRONT 2.4 mm REAR 2.8 mm

FRONT AXLE

SOLID ○ SPLIT ● 90 DEG ○ STR ○

CLUTCH

TYPE	Reverse
SHOE	Yellow
PRELOAD	1.1mm
GAP	Gap 0.7 Float 0.05

GEAR RATIO

1ST 19 / 60 2ND 24 / 58

ENGINE	Picco Monza Evo	PIPE	Picco
MANIFOLD	Picco	GLOWPLUG	
FUEL	Speedw'x		

NOTES

e25g Brass in front of engine
Low friction belts and pulleys
Briiliant Pivot Balls
Brilliant bearings
Brilliant Titanium pin set
Briiliant light weight screw set
Raised rear axle in hub (eccentric)
Front carbon brace on body post / bumper

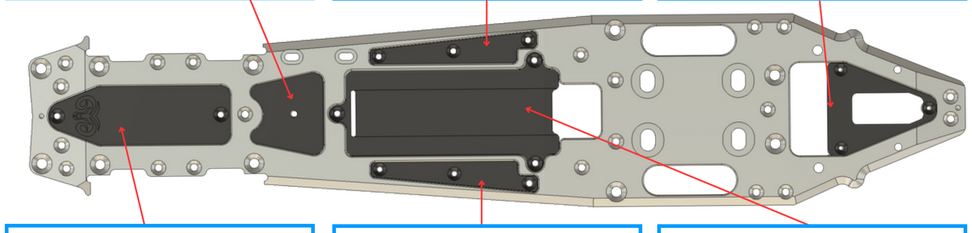

CARBON ○ BRASS ○ | CARBON ○ BRASS ✔ | CARBON ○ BRASS ○

CARBON ○ BRASS ✔ | CARBON ○ BRASS ✔ | CARBON ✔ BRASS ○