SHEPHERD
MICRO RACING TEAM

VELOX 8.3

NAME	Lars Hoppe
DATE	16/08/25
EVENT	EC
TRACK	Halifax
AIR TEMP	25
TRACTION	Med
BEST LAP	13.6

CASTER 3.0 mm

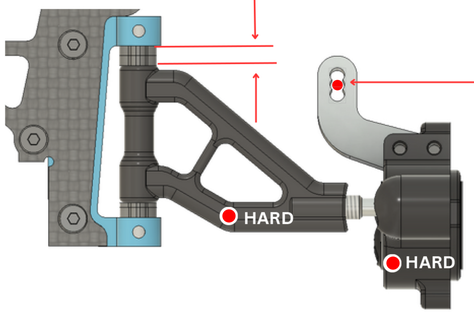

UPRIGHT INSERTS: CENTRIC ○ EXCENTRIC ✔

BUMP STEER 1.0 mm

FRONT ONEWAY POSITION

	HIGH		✔
BELT	210mm	210mm	207mm
FRONT — REAR			
BELT	210mm	210mm	207mm
		LOW	

ACTIVE ○ SHIM ___ mm

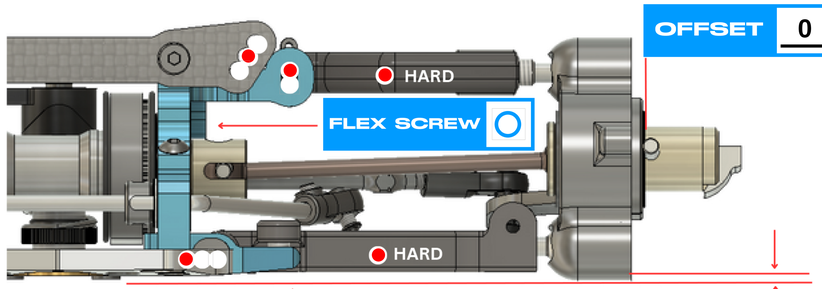

FLEX SCREW ○

OFFSET 0.6 mm

RIDE HEIGHT 7.5 mm

DOWNSTOP 1.0 mm

WHEELBASE: LONG ○ SHORT ✔

TOE IN/OUT 0.7°

CAMBER LEFT 2.25°

WIDTH 252.0 mm

CAMBER RIGHT 2.0°

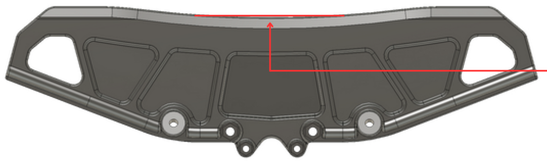

BODY TS040

DISTANCE TO BUMPER 19 mm

AWS BATTERY TRAY ○

CARBON ✔ BRASS ○ | CARBON ○ BRASS ○ | CARBON ○ BRASS ○

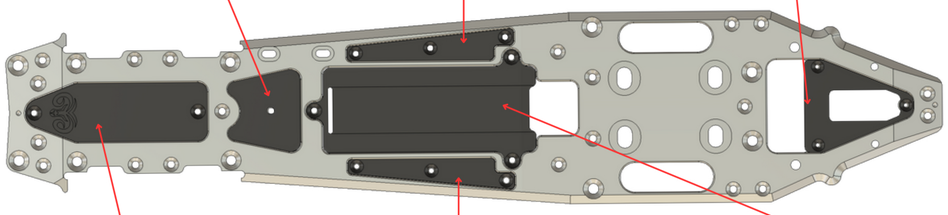

CARBON ○ BRASS ○ | CARBON ○ BRASS ○ | CARBON ✔ BRASS ○

FRONT / REAR

FRONT LEFT	FRONT RIGHT		REAR LEFT	REAR RIGHT
Hotrace		BRAND		
32	32	SHORE	35	35
69	69	DIAMETER	76	76
		ADDITIVE		

SHOCKS

MG white	SPRINGS	MG white
700	OIL	800
	PISTON	
1.2	HOLE	1.1 / 1.2
std	FP SPRING	std

ANTI-ROLL BAR

FRONT 2.2 mm REAR 2.9 mm

FRONT AXLE

SOLID ☐ SPLIT ☐ 90 DEG ☐ STR ☐

CLUTCH

TYPE	Shepherd 3
SHOE	yellow
PRELOAD	1,3
GAP	0,8

GEAR RATIO

1ST 19 / 62 2ND 24 / 57

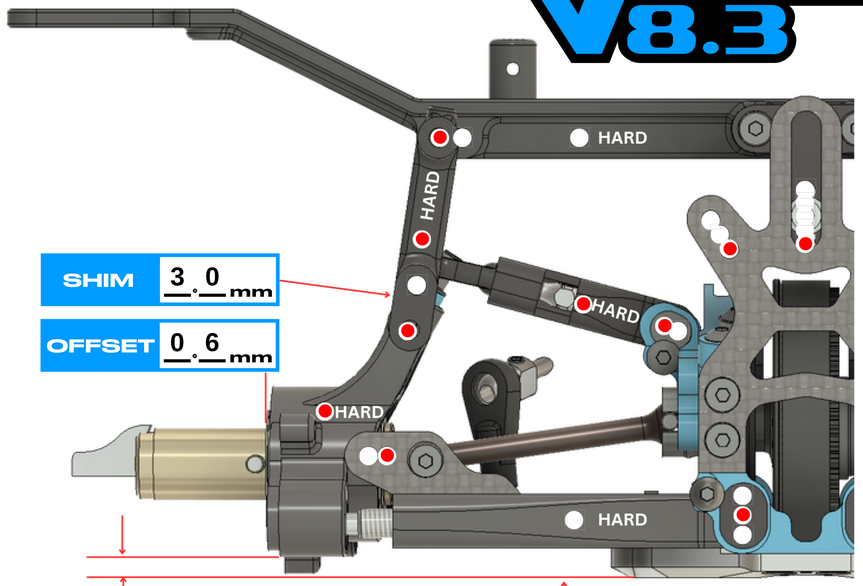

SHIM 3.0 mm

OFFSET 0.6 mm

DOWNSTOP 8.0 mm

RIDE HEIGHT 9.0 mm

CAMBER LEFT 2.5°

TOE IN/OUT 2.5°

CAMBER RIGHT __.__°

WIDTH 261.0 mm

LONG ○ MEDIUM ✔ SHORT ○

8mm ☐ 9mm ☐ 10mm ●

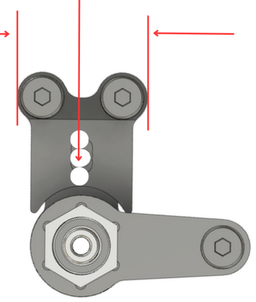

UPRIGHT INSERTS: F ◉ R ○

AERO DISCS: F ✔ R ○

ENGINE	Reds	PIPE	Reds 2206		
MANIFOLD	Reds straight	GLOWPLUG	Reds 7	FUEL	Energy

NOTES

LHo 10mm Ackermann
LHo Rear weight under rear belt
LHo Bodymount
Light bumper (36g)
25g behind fuel tank
Radioplate and Chassis Velox 8.2