SHEPHERD
MICRO RACING TEAM

VELOX 8.3

NAME	Jesse Keller
DATE	15-06-2025
EVENT	EC warmup
TRACK	Halifax
AIR TEMP	18°C
TRACTION	Soooo low!
BEST LAP	14.1

CASTER 3.0 mm

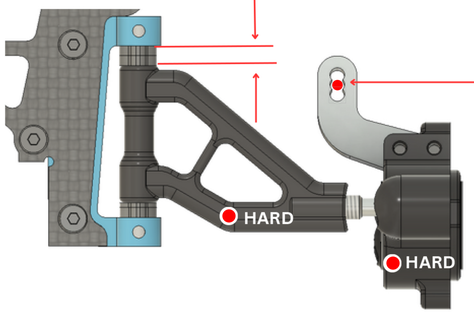

UPRIGHT INSERTS: CENTRIC ○ EXCENTRIC ✔

BUMP STEER 0.5 mm

FRONT ONEWAY POSITION

	HIGH		
BELT	210mm ✔	210mm	207mm
FRONT — REAR			
BELT	210mm	210mm	207mm
		LOW	

ACTIVE ○ SHIM ___ mm

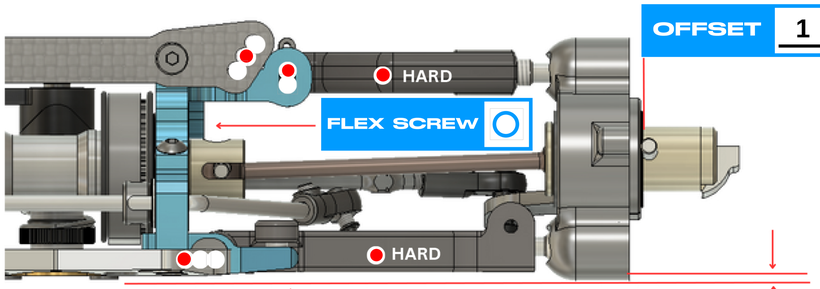

OFFSET 1.0 mm

FLEX SCREW ○

RIDE HEIGHT 8.0 mm

DOWNSTOP 0.5 mm

WHEELBASE: LONG ○ SHORT ✔

TOE IN/OUT 2.0°

CAMBER LEFT 2.0°

WIDTH 251.0 mm

CAMBER RIGHT 1.5°

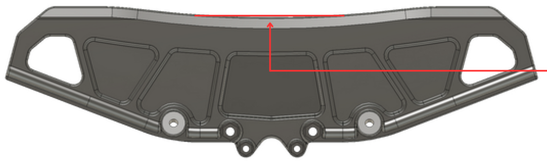

BODY: Blitz ts040

DISTANCE TO BUMPER 19 mm

AWS BATTERY TRAY ✔

CARBON ✔ BRASS ○ | CARBON ○ BRASS ○ | CARBON ○ BRASS ○

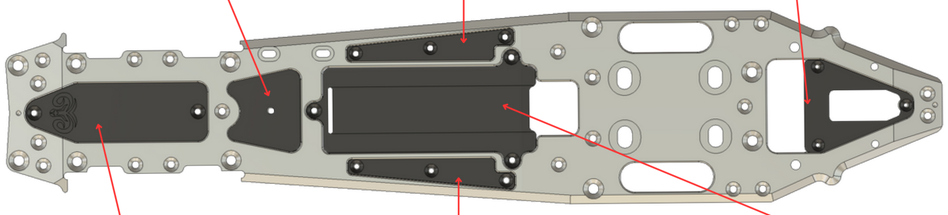

CARBON ○ BRASS ✔ | CARBON ○ BRASS ○ | CARBON ✔ BRASS ○

FRONT / REAR

FRONT LEFT	FRONT RIGHT		REAR LEFT	REAR RIGHT
Hotrace	Light	BRAND	Hotrace	Light
32	32	SHORE	35	35
69	69	DIAMETER	76	76
		ADDITIVE		

SHOCKS

Spashett white	SPRINGS	Spashett White
650	OIL	800
1x1.2mm	PISTON	2x1.2mm
1	HOLE	2
811305 (kit, hard)	FP SPRING	811305 (kit, hard)

ANTI-ROLL BAR

FRONT 2.2 mm REAR 2.9 mm

FRONT AXLE

SOLID ○ SPLIT ● 90 DEG ○ STR ●

CLUTCH

TYPE	Standard kit
SHOE	Yellow
PRELOAD	1.6
GAP	0.8

GEAR RATIO

1ST 19 / 62 2ND 24 / 58

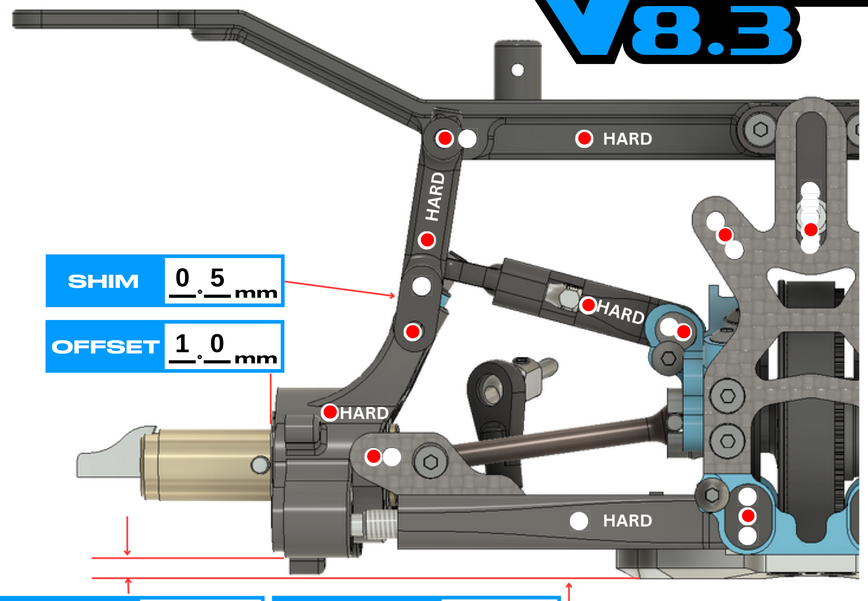

SHIM 0.5 mm

OFFSET 1.0 mm

DOWNSTOP 7.0 mm

RIDE HEIGHT 9.5 mm

CAMBER LEFT 3.0°

TOE IN/OUT 3.0°

CAMBER RIGHT 2.5°

WIDTH 262.0 mm

LONG ○ MEDIUM ✔ SHORT ○

8mm ○ 9mm ○ 10mm ●

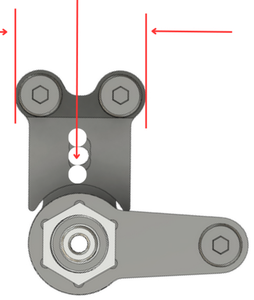

UPRIGHT INSERTS: F ○ R ●

AERO DISCS: F ✔ R ○

ENGINE	Max rp9.5	PIPE	2164		
MANIFOLD	02099	GLOWPLUG	RP7	FUEL	Maxima

NOTES

Spashett rear hub inserts
Polished racing rear carbon body mount ts040
Toe measured in total so /2 for each side
Lightweight front bumper
35g front engine, 32g rear engine + 2x5g on lower rollcenter