SHEPHERD
MICRO RACING TEAM

VELOX 8.3

NAME	Jesse Keller
DATE	01-06-2025
EVENT	Ries ermen memorial
TRACK	Baanbrekers
AIR TEMP	22
TRACTION	Medium-high
BEST LAP	12.775

CASTER 3.0 mm

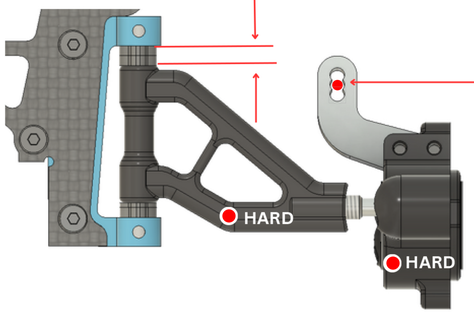

UPRIGHT INSERTS: CENTRIC ○ EXCENTRIC ✔

BUMP STEER 0.5 mm

FRONT ONEWAY POSITION

	HIGH		
BELT	210mm ✔	210mm	207mm
FRONT — REAR			
BELT	210mm	210mm	207mm
		LOW	

ACTIVE ○ SHIM ___ mm

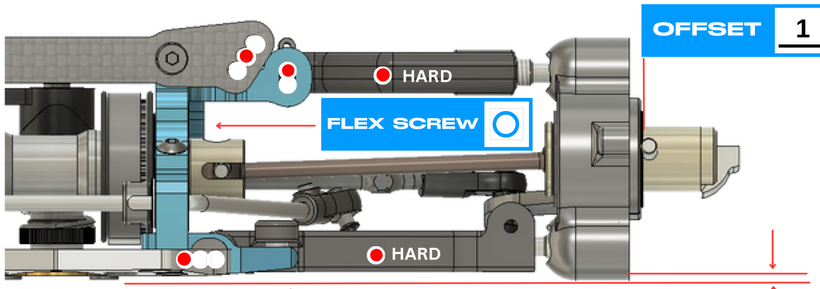

FLEX SCREW ○

OFFSET 1.0 mm

RIDE HEIGHT 8.0 mm

DOWNSTOP 1.3 mm

WHEELBASE: LONG ○ SHORT ✔

TOE IN/OUT 1.0°

CAMBER LEFT 2.0°

WIDTH 251.5 mm

CAMBER RIGHT 2.5°

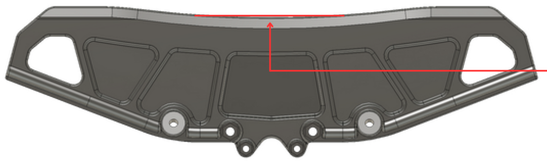

BODY: Blitz ts040

DISTANCE TO BUMPER 19 mm

AWS BATTERY TRAY ○

CARBON ✔ BRASS ○ | CARBON ○ BRASS ○ | CARBON ○ BRASS ○

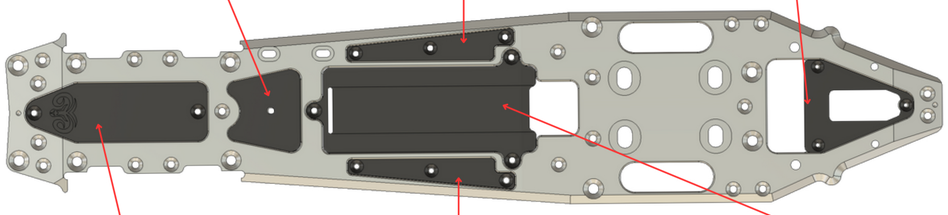

CARBON ○ BRASS ○ | CARBON ○ BRASS ○ | CARBON ✔ BRASS ○

FRONT / REAR

FRONT LEFT	FRONT RIGHT	TYRES	REAR LEFT	REAR RIGHT
ENS	Matrix	BRAND	ENS	Matrix
32	32	SHORE	35	35
69	69	DIAMETER	76	76
		ADDITIVE		

SHOCKS

Spashett white	SPRINGS	Spashett White
650	OIL	800
1x1.2mm	PISTON	2x1.2mm
1	HOLE	2
811305 (kit, hard)	FP SPRING	811305 (kit, hard)

ANTI-ROLL BAR

FRONT 2.2 mm REAR 2.9 mm

FRONT AXLE

SOLID ○ SPLIT ● 90 DEG ○ STR ○

CLUTCH

TYPE	Standard kit
SHOE	Yellow
PRELOAD	1.6
GAP	0.85

GEAR RATIO

1ST 19 / 61 2ND 24 / 57

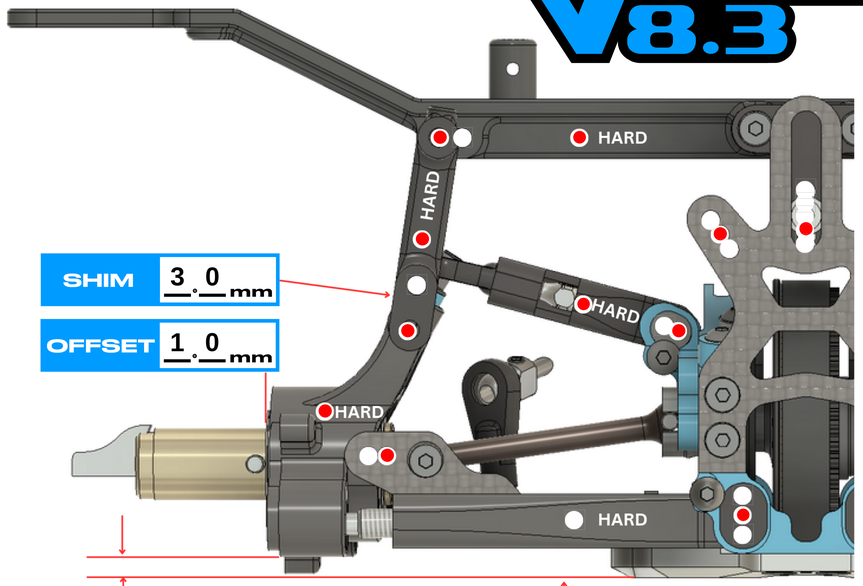

SHIM 3.0 mm

OFFSET 1.0 mm

DOWNSTOP 8.0 mm

RIDE HEIGHT 9.5 mm

CAMBER LEFT 3.0°

TOE IN/OUT 2.5°

CAMBER RIGHT 3.5°

WIDTH 261.5 mm

LONG ○ MEDIUM ✔ SHORT ○

8mm ○ 9mm ○ 10mm ●

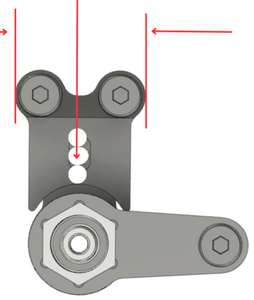

UPRIGHT INSERTS: F ● R ○

AERO DISCS: F ✔ R ○

ENGINE	MAX RP9.5	PIPE	MAX02099		
MANIFOLD	MAX 2164	GLOWPLUG	RP7	FUEL	Maxima

NOTES

Narrow shock bridge fronts
LHO rear carbon body mount ts040
Toe measured in total so /2 for each side
Lightweight front bumper
35g in front of engine + 34g behind engine
10gr total added to rear roll center screws
Lho radioplate
Maybe 0.5 degrees lees camber in front next time.