SHEPHERD
MICRO RACING TEAM

VELOX 8.3

NAME	Jesse Keller
DATE	20-07-2025
EVENT	ENS Aigen
TRACK	Aigen
AIR TEMP	27°C
TRACTION	Medium-high(sugar water sprayed)
BEST LAP	15.021

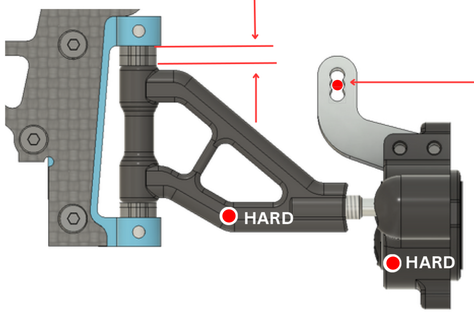

CASTER 3.0 mm

UPRIGHT INSERTS: CENTRIC ○ EXCENTRIC ✔

BUMP STEER 0.5 mm

FRONT ONEWAY POSITION

	HIGH		
BELT	210mm	210mm	207mm
FRONT — REAR			
BELT	210mm	210mm	207mm ✔
		LOW	

ACTIVE ○ SHIM ___ mm

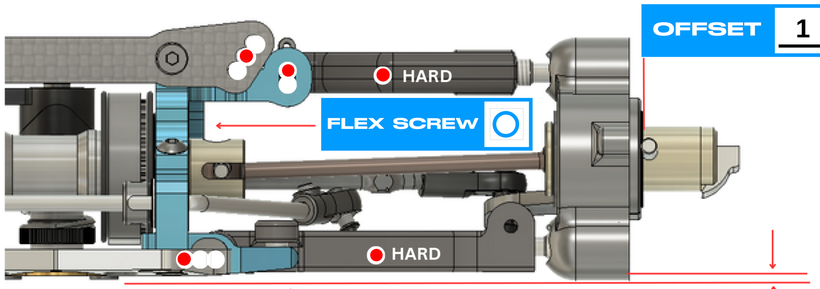

FLEX SCREW ○

OFFSET 1.0 mm

RIDE HEIGHT 8.0 mm

DOWNSTOP 0.0 mm

WHEELBASE: LONG ○ SHORT ✔

TOE IN/OUT 2.0°

CAMBER LEFT 2.0°

WIDTH 251.0 mm

CAMBER RIGHT 2.5°

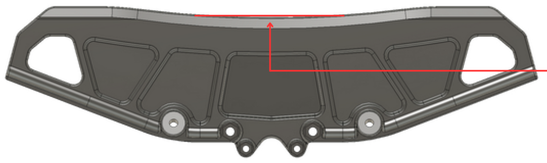

BODY: Blitz ts040

DISTANCE TO BUMPER 19 mm

AWS BATTERY TRAY ○

CARBON ✔ BRASS ○ | CARBON ✔ BRASS ○ | CARBON ○ BRASS ○

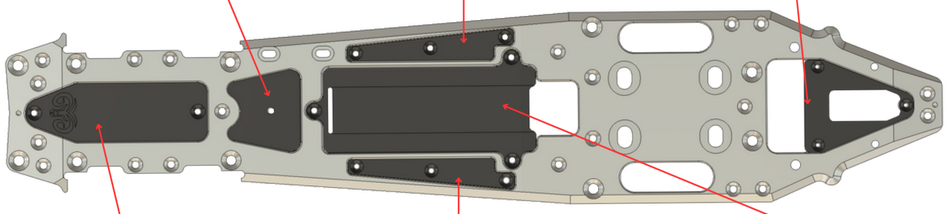

CARBON ✔ BRASS ○ | CARBON ✔ BRASS ○ | CARBON ✔ BRASS ○

FRONT / REAR

FRONT LEFT	FRONT RIGHT		REAR LEFT	REAR RIGHT
ENS	Matrix	TYRES BRAND	ENS	Matrix
32	32	SHORE	35	35
69	69	DIAMETER	76	76
		ADDITIVE		

SHOCKS

Spashett white	SPRINGS	Spashett White
650	OIL	800
1x1.2mm	PISTON	2x1.2mm
1	HOLE	2
811305 (kit, hard)	FP SPRING	811305 (kit, hard)

ANTI-ROLL BAR

FRONT 2.3 mm REAR 2.9 mm

FRONT AXLE

SOLID ○ SPLIT ● 90 DEG ○ STR ○

CLUTCH

TYPE	BM spring
SHOE	Yellow
PRELOAD	1.38
GAP	0.70

GEAR RATIO

1ST 19 / 62 2ND 24 / 58

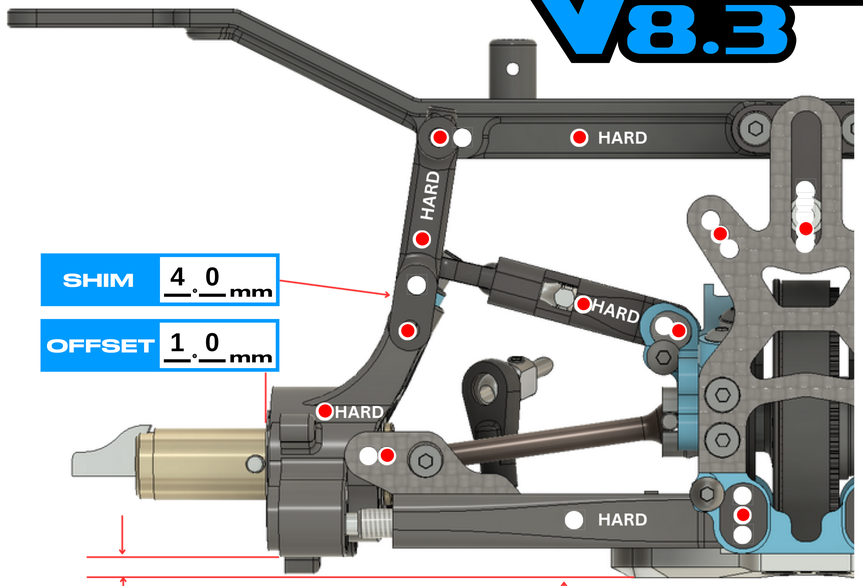

SHIM 4.0 mm

OFFSET 1.0 mm

DOWNSTOP 9.5 mm

RIDE HEIGHT 9.5 mm

CAMBER LEFT 3.0°

TOE IN/OUT 3.0°

CAMBER RIGHT 3.5°

WIDTH 262.0 mm

LONG ○ MEDIUM ✔ SHORT ○

8mm ○ 9mm ● 10mm ○

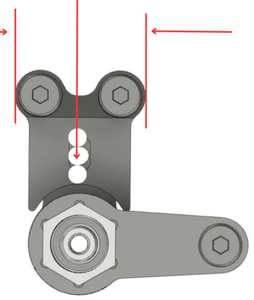

UPRIGHT INSERTS: F ○ R ●

AERO DISCS: F ✔ R ○

ENGINE	Ft 7 port	PIPE	MAX02099		
MANIFOLD	MAX 2164	GLOWPLUG	RP7	FUEL	RT ultra

NOTES

Narrow shock bridge front
LHO rear carbon body mount ts040
Toe measured in total so /2 for each side
Lightweight front bumper
35g in front of engine + 32g in rear
10gr total added to rear roll center screws