SHEPHERD
MICRO RACING TEAM

VELOX 8.3

NAME	Gaston van Kleef
DATE	14–9-2025
EVENT	NK 5 Raco
TRACK	RACO Utrecht
AIR TEMP	20
TRACTION	medium
BEST LAP	14.0 / 3rd A finale Nomac Class

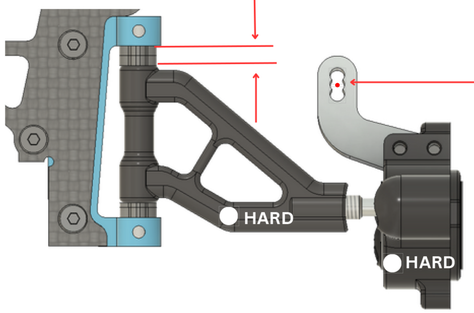

CASTER 3.0 mm

UPRIGHT INSERTS: CENTRIC ✓ / EXCENTRIC ○

BUMP STEER 2.0 mm

FRONT ONEWAY POSITION

	HIGH		
BELT	210mm ✓	210mm ●	207mm ○
FRONT — REAR			
BELT	210mm ○	210mm ●	207mm ○
		LOW	

ACTIVE ○ SHIM ___ mm

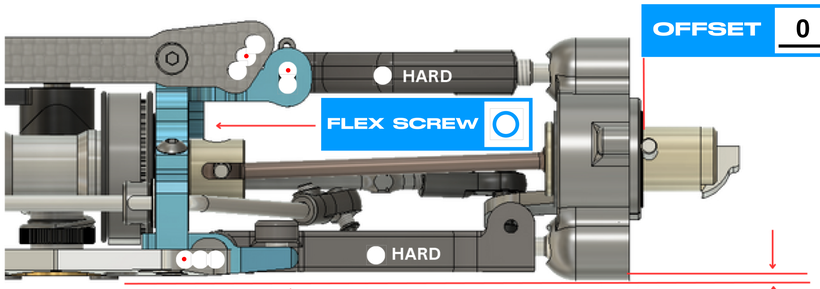

FLEX SCREW ○

OFFSET 0.6 mm

RIDE HEIGHT 8.0 mm

DOWNSTOP 1.0 mm

WHEELBASE: LONG ○ SHORT ✓

TOE IN/OUT 1.0°

CAMBER LEFT 2.0°

WIDTH 252.0 mm

CAMBER RIGHT 2.0°

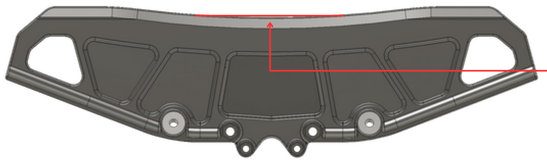

BODY: Hyper Diablo

DISTANCE TO BUMPER ___ mm

AWS BATTERY TRAY ○

CARBON ✓ BRASS ○ | CARBON ○ BRASS ○ | CARBON ○ BRASS ○

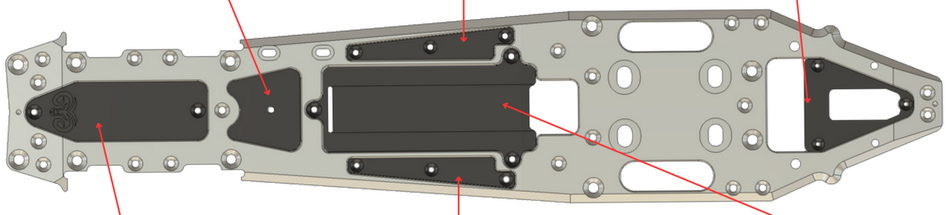

CARBON ○ BRASS ○ | CARBON ○ BRASS ○ | CARBON ✓ BRASS ○

FRONT / REAR

FRONT LEFT	FRONT RIGHT	TYRES	REAR LEFT	REAR RIGHT
Matrix		BRAND	Matrix	
32	32	SHORE	35	35
69	69	DIAMETER	76	76
NO!		ADDITIVE	NO!	

SHOCKS

Kit 8.2	SPRINGS	Kit 8.2
650cst	OIL	750cst
Std	PISTON	Std
1 x 1mm	HOLE	2 x 1mm
Kit	FP SPRING	Kit

ANTI-ROLL BAR

FRONT 2.2 mm REAR 2.8 mm

FRONT AXLE

SOLID ○ SPLIT • 90 DEG ○ STR ○

CLUTCH

TYPE	Shepherd
SHOE	Yellow
PRELOAD	1.3mm
GAP	0.6mm

GEAR RATIO

1ST 19 / 61 2ND 24 / 57

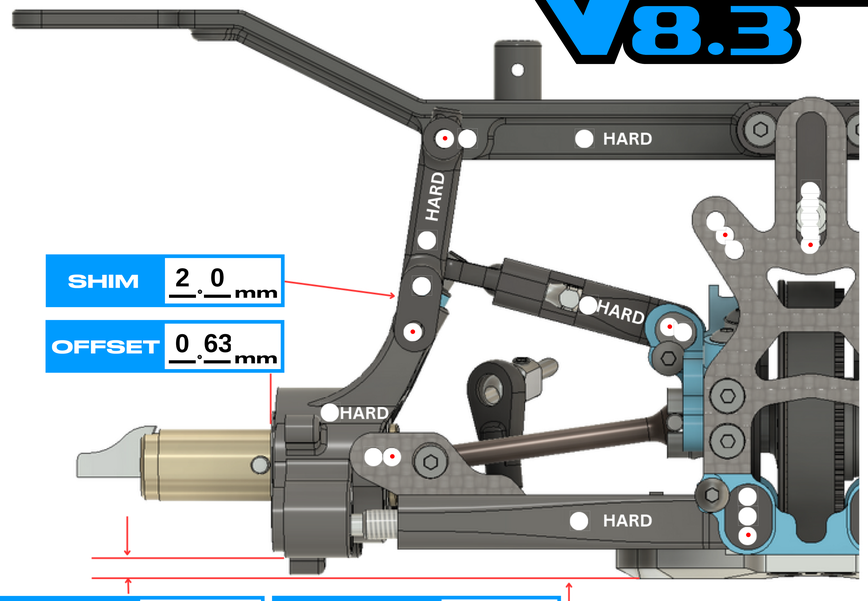

SHIM 2.0 mm

OFFSET 0.63 mm

DOWNSTOP 8.0 mm

RIDE HEIGHT 9.9 mm

CAMBER LEFT 3.0°

TOE IN/OUT 3.0°

CAMBER RIGHT 3.0°

WIDTH 261.0 mm

LONG ○ MEDIUM ✓ SHORT ○

8mm ○ 9mm • 10mm ○

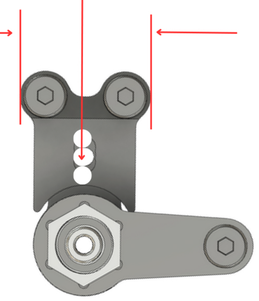

UPRIGHT INSERTS: F ○ R ○

AERO DISCS: F ✓ R ○

ENGINE	OS Speed R2105	PIPE	OS TR02 EFRA 2165		
MANIFOLD	OS MR02	GLOWPLUG	RP 7	FUEL	TEMPO

NOTES

V8.2 Chassis
V8.2 Engine mounting blocks
35 Gram behind tank
10 Gram behind engine
1800 Lipo on chassis in carbon tray
Futuba CB 701 on Steering, CT 702 on throttle / Brake.

3rd position in A final in Nomac Cup. Car was very stable, no tyre change needed in 30 minute final. 5 minute fuel stop strategy with smooth throttle finger…