SHEPHERD
MICRO RACING TEAM

VELOX 8.3

NAME	BARANGER Fabien
DATE	11/09/2025
EVENT	GP de Monteux
TRACK	MRCV
AIR TEMP	20
TRACTION	good
BEST LAP	16.319

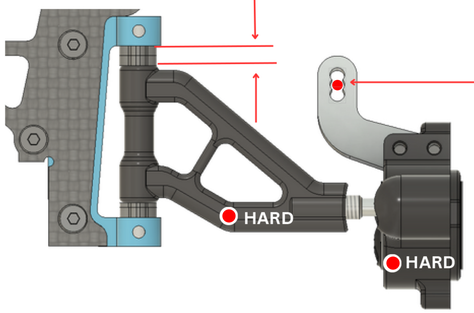

CASTER 1.__ mm

UPRIGHT INSERTS: CENTRIC ○ EXCENTRIC ✔

BUMP STEER 3.__ mm

FRONT ONEWAY POSITION

	HIGH		
BELT	210mm	210mm	207mm
FRONT — REAR			
BELT	210mm	210mm	207mm
		LOW	✔

ACTIVE ○ SHIM ___ mm

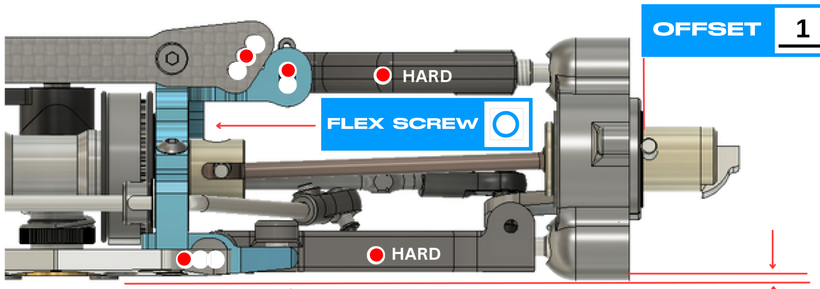

FLEX SCREW ○

OFFSET 1.__ mm

RIDE HEIGHT 7.5 mm

DOWNSTOP 1.__ mm

WHEELBASE: LONG ○ SHORT ✔

TOE IN/OUT 1.5°

CAMBER LEFT 2.__°

WIDTH 252.5 mm

CAMBER RIGHT 2.__°

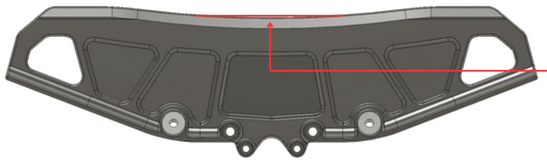

BODY hyper diablo

DISTANCE TO BUMPER pc mm

AWS BATTERY TRAY ○

CARBON ○ BRASS ○ | CARBON ✔ BRASS ○ | CARBON ○ BRASS ○

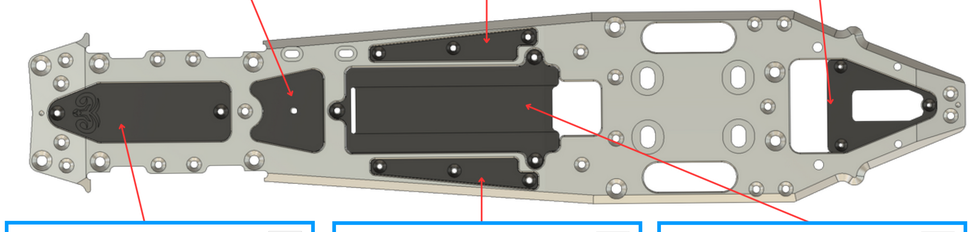

CARBON ○ BRASS ○ | CARBON ✔ BRASS ○ | CARBON ✔ BRASS ○

FRONT / REAR

FRONT LEFT	FRONT RIGHT	TYRES	REAR LEFT	REAR RIGHT
		BRAND		
32	32	SHORE	35	35
69	69	DIAMETER	76	76
		ADDITIVE		

SHOCKS

Mugen withe	SPRINGS	Capricorn green
800	OIL	800
1.2x1	PISTON	1.2x2
	HOLE	
super soft	FP SPRING	super soft

ANTI-ROLL BAR

FRONT 2.2 mm REAR 3 mm

FRONT AXLE

SOLID ○ SPLIT ○ 90 DEG ○ STR ●

CLUTCH

TYPE	shepherd
SHOE	yellow
PRELOAD	0.90
GAP	0.8

GEAR RATIO

1ST 19 / 62 2ND 24 / 57

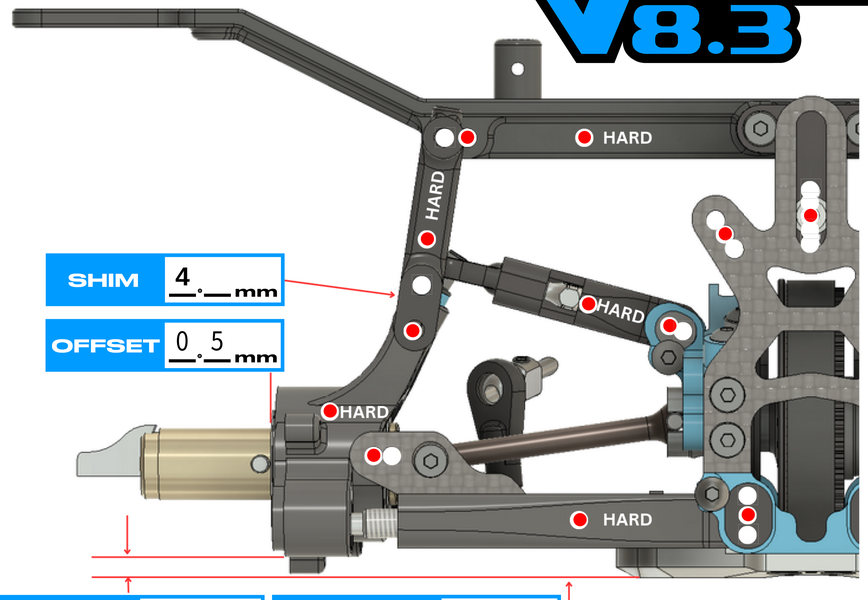

SHIM 4.__ mm

OFFSET 0.5 mm

DOWNSTOP 8.__ mm

RIDE HEIGHT 9.__ mm

CAMBER LEFT 2.5°

TOE IN/OUT 2.5°

CAMBER RIGHT 2.5°

WIDTH 258.5 mm

LONG ✔ MEDIUM ○ SHORT ○

8mm ○ 9mm ○ 10mm ●

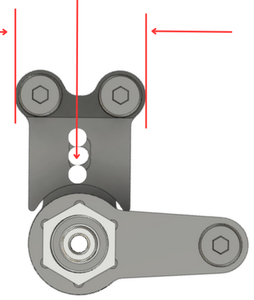

UPRIGHT INSERTS: F ○ R ○

AERO DISCS: F ○ R ○

ENGINE	OS 2106	PIPE	tr03		
MANIFOLD	mr04	GLOWPLUG	rp7	FUEL	maxima

NOTES

Lipo battery 1800 MAH

Servo CJ Power

5-gram weight in the front
25-gram under the rear belt (LHO)
10-gram weight at the rear

Carbon stiffener front bumper