SHEPHERD
MICRO RACING TEAM

VELOX 8.3

NAME	BARANGER Fabien
DATE	10/12/2025
EVENT	French Cup
TRACK	MACI
AIR TEMP	20
TRACTION	good
BEST LAP	16.010

CASTER 1.__ mm

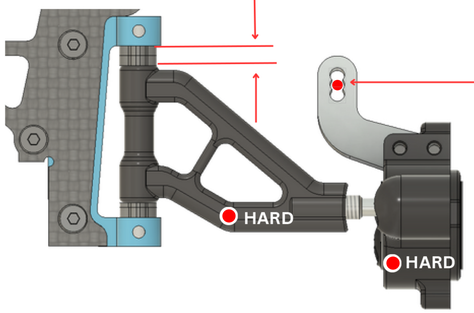

UPRIGHT INSERTS: CENTRIC ○ EXCENTRIC ✔

BUMP STEER 3.__ mm

FRONT ONEWAY POSITION

	HIGH		
BELT	210mm	210mm	207mm
FRONT — REAR			
BELT	210mm	210mm	207mm
		LOW	✔

ACTIVE ○ SHIM ___ mm

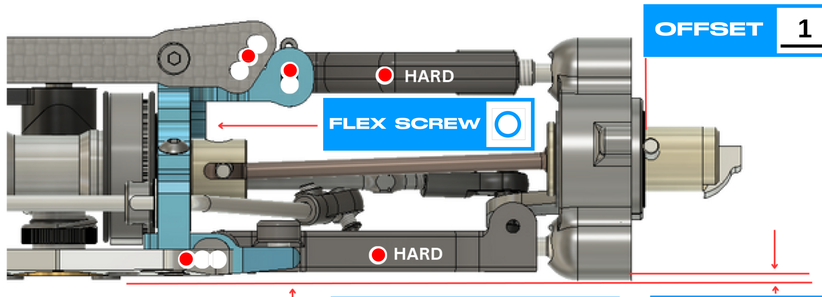

FLEX SCREW ○

OFFSET 1.__ mm

RIDE HEIGHT 7.5 mm

DOWNSTOP 1.__ mm

WHEELBASE: LONG ○ SHORT ✔

TOE IN/OUT 1.5°

CAMBER LEFT 2.__ °

WIDTH 252.5 mm

CAMBER RIGHT 2.__ °

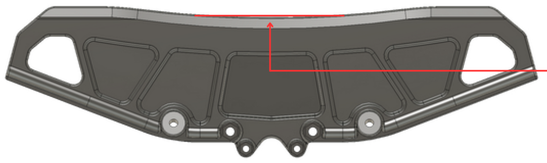

BODY: hyper diablo

DISTANCE TO BUMPER pc mm

AWS BATTERY TRAY ○

CARBON ○ BRASS ○ | CARBON ✔ BRASS ○ | CARBON ○ BRASS ✔

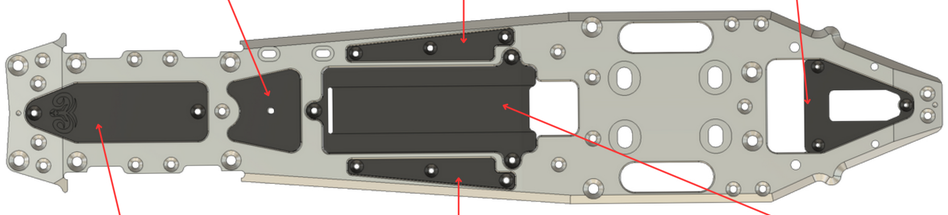

CARBON ○ BRASS ○ | CARBON ✔ BRASS ○ | CARBON ✔ BRASS ○

FRONT / REAR

FRONT LEFT	FRONT RIGHT	TYRES	REAR LEFT	REAR RIGHT
		BRAND		
32	32	SHORE	35	35
69	69	DIAMETER	76	76
		ADDITIVE		

SHOCKS

withe m	SPRINGS	withe m
800	OIL	800
1.2x1	PISTON	1.2x2
	HOLE	
super soft	FP SPRING	super soft

ANTI-ROLL BAR

FRONT 2.2 mm REAR 3 mm

FRONT AXLE

SOLID ○ SPLIT ○ 90 DEG ○ STR ●

CLUTCH

TYPE	shepherd
SHOE	yellow
PRELOAD	0.90
GAP	0.8

GEAR RATIO

1ST 19 / 62 2ND 24 / 57

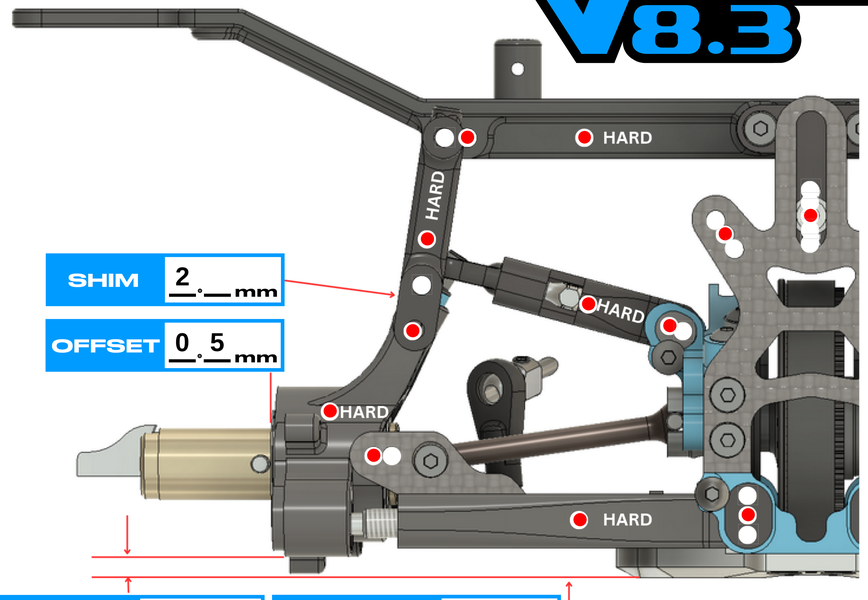

SHIM 2.__ mm

OFFSET 0.5 mm

DOWNSTOP 8.__ mm

RIDE HEIGHT 9.__ mm

CAMBER LEFT 3.0°

TOE IN/OUT 3.0°

CAMBER RIGHT 3.0°

WIDTH 259.__ mm

LONG ✔ MEDIUM ○ SHORT ○

8mm ○ 9mm ○ 10mm ●

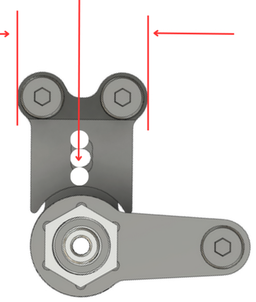

UPRIGHT INSERTS: F ○ R ○

AERO DISCS: F ○ R ○

ENGINE	OS 2106	PIPE	tr03		
MANIFOLD	mr04	GLOWPLUG	rp7	FUEL	maxima

NOTES

Lipo battery 1800 MAH

Servo CJ Power

28-gram weight under the rear belt

Carbon stiffener front bumper