SHEPHERD
MICRO RACING TEAM

VELOX 8.3

NAME	BARANGER Fabien
DATE	06/10/2025
EVENT	French Championship Round 3
TRACK	MRTE (Ris-Orangis - France)
AIR TEMP	22°C
TRACTION	Good
BEST LAP	14.969

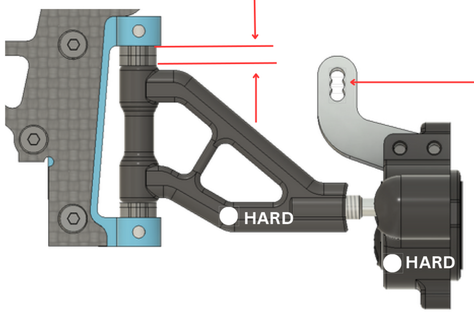

CASTER 2.0 mm

UPRIGHT INSERTS: CENTRIC ○ EXCENTRIC ✔

BUMP STEER 1.0 mm

FRONT ONEWAY POSITION

	HIGH		
BELT	210mm	210mm	207mm
FRONT — REAR			
BELT	210mm	210mm	207mm
		LOW	

ACTIVE ○ SHIM ___ mm

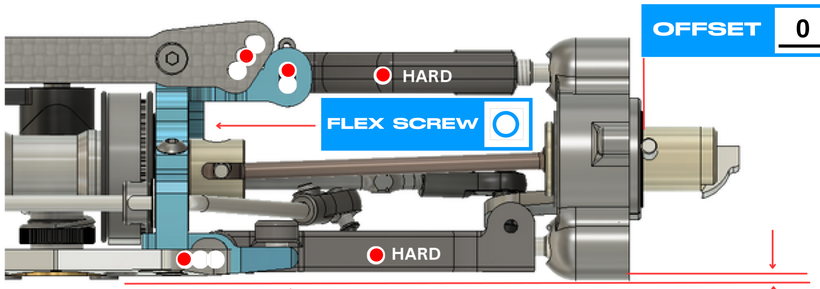

FLEX SCREW ○

OFFSET 0.5 mm

RIDE HEIGHT 8.0 mm

DOWNSTOP 0.0 mm

WHEELBASE: LONG ○ SHORT ✔

TOE IN/OUT 3.0°

CAMBER LEFT 2.0°

WIDTH 250.0 mm

CAMBER RIGHT 2.0°

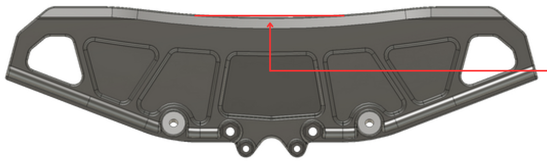

BODY: Hyper Diablo

DISTANCE TO BUMPER: PC mm

AWS BATTERY TRAY ○

CARBON ○ BRASS ○ | CARBON ✔ BRASS ○ | CARBON ○ BRASS ✔

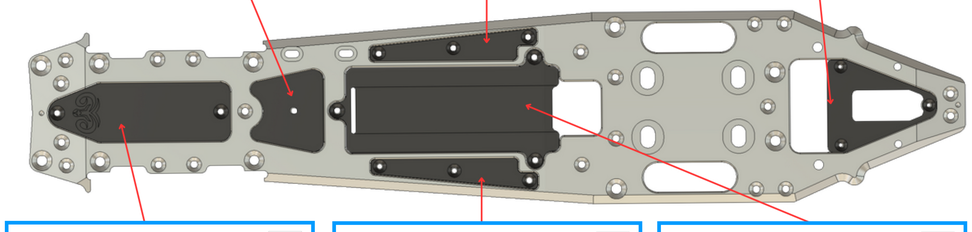

CARBON ○ BRASS ○ | CARBON ✔ BRASS ○ | CARBON ✔ BRASS ○

FRONT / REAR

FRONT LEFT	FRONT RIGHT	TYRES	REAR LEFT	REAR RIGHT
Matrix	Matrix	BRAND	Matrix	Matrix
32	32	SHORE	35	35
69	69	DIAMETER	76	76
		ADDITIVE		

SHOCKS

Blue Mugen	SPRINGS	Pink Capricorn
1000	OIL	800
1.2	PISTON	1.2
	HOLE	
Extra soft	FP SPRING	Extra soft

ANTI-ROLL BAR

FRONT 2.4 mm REAR 3.0 mm

FRONT AXLE

SOLID ○ SPLIT ○ 90 DEG ○ STR ●

CLUTCH

TYPE	Kit Shepherd
SHOE	Yellow
PRELOAD	1,3 mm
GAP	0.8

GEAR RATIO

1ST 19 / 62 2ND 24 / 57

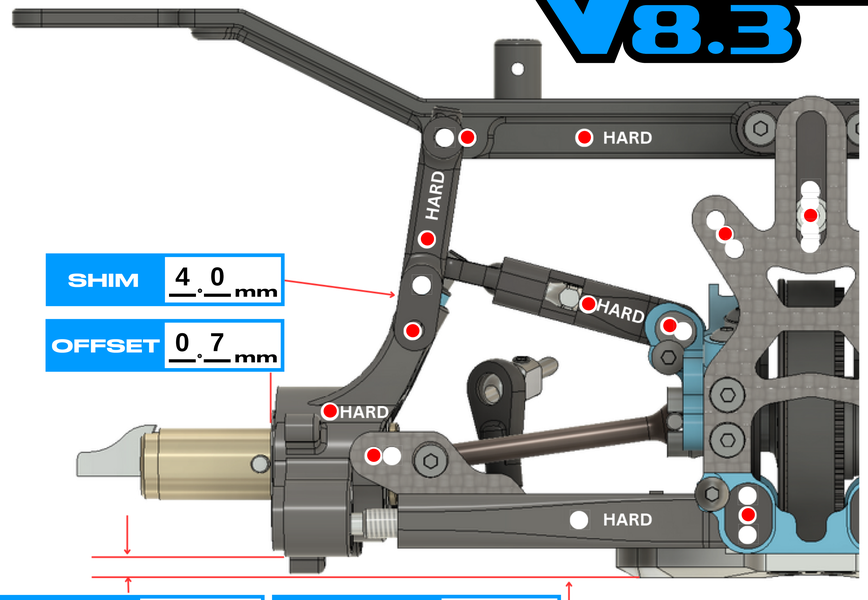

SHIM 4.0 mm

OFFSET 0.7 mm

DOWNSTOP 8.0 mm

RIDE HEIGHT 9.5 mm

CAMBER LEFT 3.0°

TOE IN/OUT 3.0°

CAMBER RIGHT 3.0°

WIDTH 260.0 mm

LONG ✔ MEDIUM ○ SHORT ○

8mm ○ 9mm ○ 10mm ●

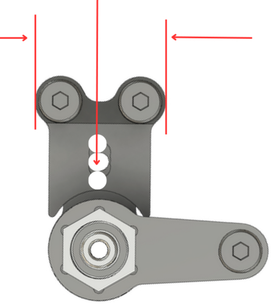

UPRIGHT INSERTS: F ○ R ○

AERO DISCS: F ○ R ○

ENGINE	OS 2106	PIPE	TR 03		
MANIFOLD	MR 04	GLOWPLUG	OS RP7	FUEL	Maxima

NOTES

Lipo battery 1800 MAH

Servo CJ Power

10-gram weight under the rear belt
15-gram weight in front of the engine

12-gram weight mass damper at the front