SHEPHERD
MICRO RACING TEAM

VELOX 8.3

NAME	John Carr
DATE	
EVENT	BRCA Rd 2
TRACK	Cotswold
AIR TEMP	13/14
TRACTION	Low
BEST LAP	14.42

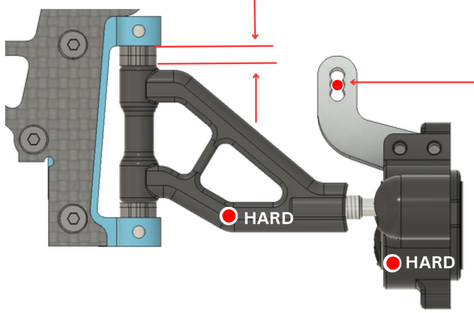

CASTER 4.0 mm

UPRIGHT INSERTS: CENTRIC ○ EXCENTRIC ✔

BUMP STEER 0.0 mm

FRONT ONEWAY POSITION

	HIGH		
BELT	210mm ✔	210mm	207mm
FRONT — REAR			
BELT	210mm ✔	210mm	207mm
		LOW	

ACTIVE ○ SHIM ___ mm

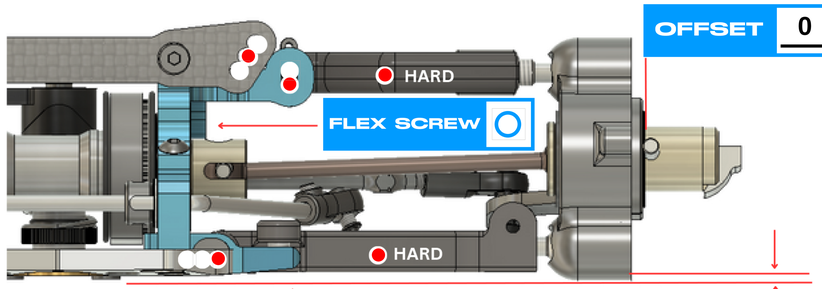

FLEX SCREW ○

OFFSET 0.5 mm

RIDE HEIGHT 7.5 mm

DOWNSTOP +0.9 mm

WHEELBASE: LONG ✔ SHORT ○

TOE IN/OUT 1.0°

CAMBER LEFT 2.0°

WIDTH 251.0 mm

CAMBER RIGHT 2.5°

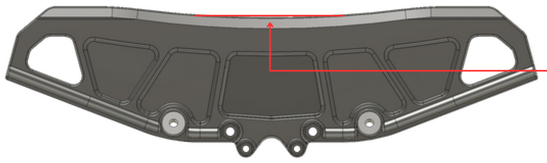

BODY: Blitz Spider

DISTANCE TO BUMPER STD mm

AWS BATTERY TRAY ○

CARBON ○ BRASS ○ | CARBON ○ BRASS ○ | CARBON ○ BRASS ○

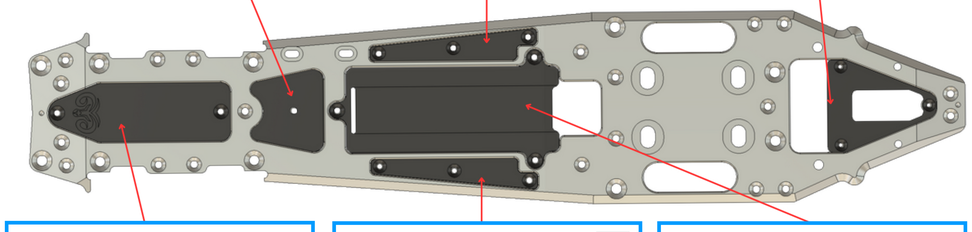

CARBON ○ BRASS ✔ | CARBON ○ BRASS ○ | CARBON ○ BRASS ✔

FRONT		REAR
LEFT RIGHT	TYRES	LEFT RIGHT
Ulti	BRAND	Ulti
Medium	SHORE	Medium
69	DIAMETER	76
	ADDITIVE	

SHOCKS

Mugen White	SPRINGS	Mugen White
700	OIL	700
1 x 1.2mm	PISTON	1 x 1.11 x 1.2mm
1	HOLE	2
kit	FP SPRING	kit2

ANTI-ROLL BAR

FRONT ___ mm REAR ___ mm

FRONT AXLE

SOLID ○ SPLIT ● 90 DEG ○ STR ○

CLUTCH

TYPE	Shepherd Reverse
SHOE	Yellow
PRELOAD	1 turn out
GAP	0.6mm

GEAR RATIO

1ST 19 / 61 2ND 24 / 57

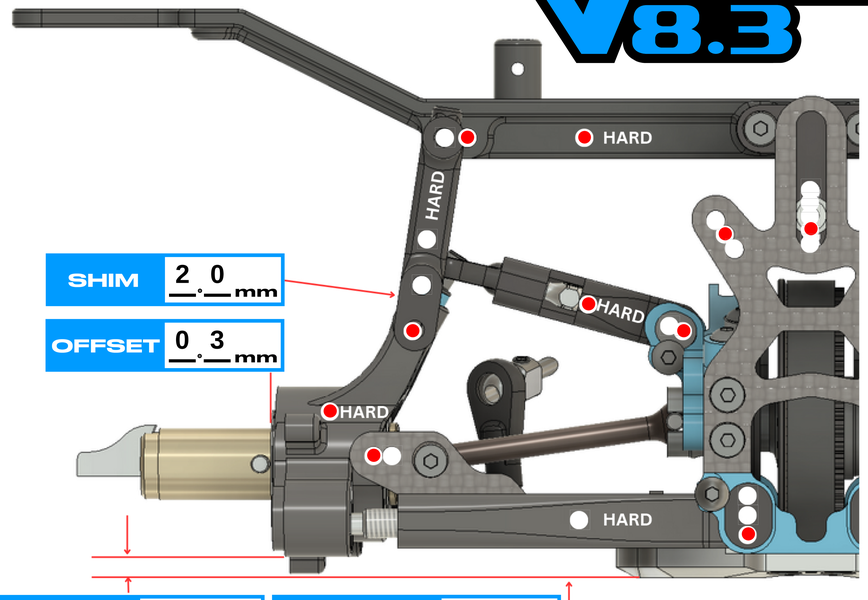

SHIM 2.0 mm

OFFSET 0.3 mm

DOWNSTOP 7.0 mm

RIDE HEIGHT 8.5 mm

CAMBER LEFT 3.0°

TOE IN/OUT ___°

CAMBER RIGHT 2.8°

WIDTH 260.0 mm

LONG ✔ MEDIUM ○ SHORT ○

8mm ○ 9mm ○ 10mm ●

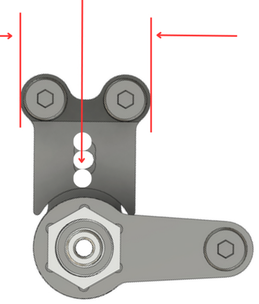

UPRIGHT INSERTS: F ○ R ●

AERO DISCS: F ○ R ✔

ENGINE	Hasi R9 AAC	PIPE	2174		
MANIFOLD	HT04	GLOWPLUG	OS 7	FUEL	Elite

NOTES

No additive ran at all this weekend. 25g in front of the engine, and 30 on th pipe side. Kit front bumper. Brilliant RC Ti screwkit and pivotballs. Rear hu inserts to allow smaller bearings fitted.