SHEPHERD
MICRO RACING TEAM

VELOX 8.3

NAME	CORREGE Bastien
DATE	06/06/25 - 08/06/25
EVENT	French Nats Rd 3
TRACK	MRTE - France
AIR TEMP	21°C
TRACTION	High
BEST LAP	15.928

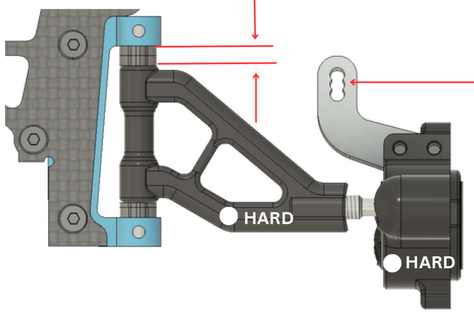

CASTER 2 mm

UPRIGHT INSERTS: CENTRIC ✔ EXCENTRIC ✔

BUMP STEER 1 mm

FRONT ONEWAY POSITION

	HIGH ✔	
BELT	210mm	210mm	207mm
FRONT — REAR		
BELT	210mm	210mm	207mm
		LOW	

ACTIVE ○ SHIM mm

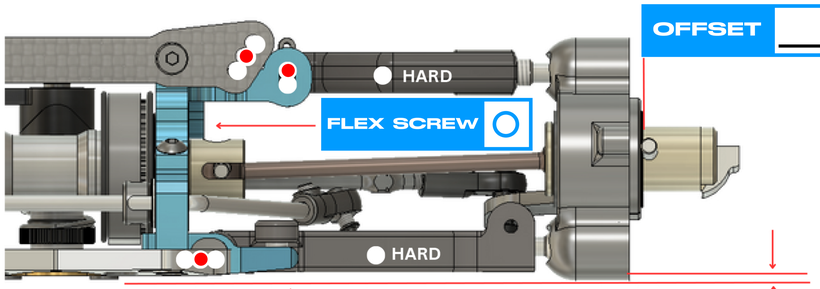

FLEX SCREW ○

OFFSET 5 mm

RIDE HEIGHT 8.0 mm

DOWNSTOP 0.0 mm

WHEELBASE: LONG ○ SHORT ✔

TOE IN/OUT 3.0°

CAMBER LEFT 1.5°

WIDTH 251.0 mm

CAMBER RIGHT 1.5°

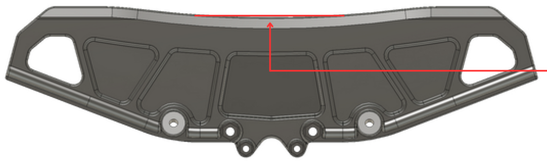

BODY Hyper Diablo - Precut

DISTANCE TO BUMPER mm

AWS BATTERY TRAY ○

CARBON ○ BRASS ○ | CARBON ○ BRASS ○ | CARBON ○ BRASS ✔

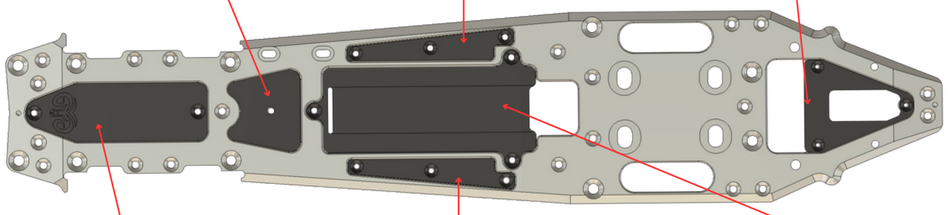

CARBON ○ BRASS ○ | CARBON ○ BRASS ○ | CARBON ✔ BRASS ○

FRONT / REAR

FRONT LEFT	FRONT RIGHT		REAR LEFT	REAR RIGHT
Hot Race		BRAND	Hot Race	
32		SHORE	35	
69		DIAMETER	76	
		ADDITIVE		

SHOCKS

Yellow Mugen	SPRINGS	Purple (adaptive) Cap
650	OIL	550
1.2	PISTON	1.2
	HOLE	
Super soft	FP SPRING	Super soft

ANTI-ROLL BAR

FRONT 2.4 mm REAR 2.9 mm

FRONT AXLE

SOLID ○ SPLIT ○ 90 DEG ○ STR ●

CLUTCH

TYPE	Shepherd
SHOE	Yellow
PRELOAD	1.1mm
GAP	0.75

GEAR RATIO

1ST 19 / 62 2ND 24 / 57

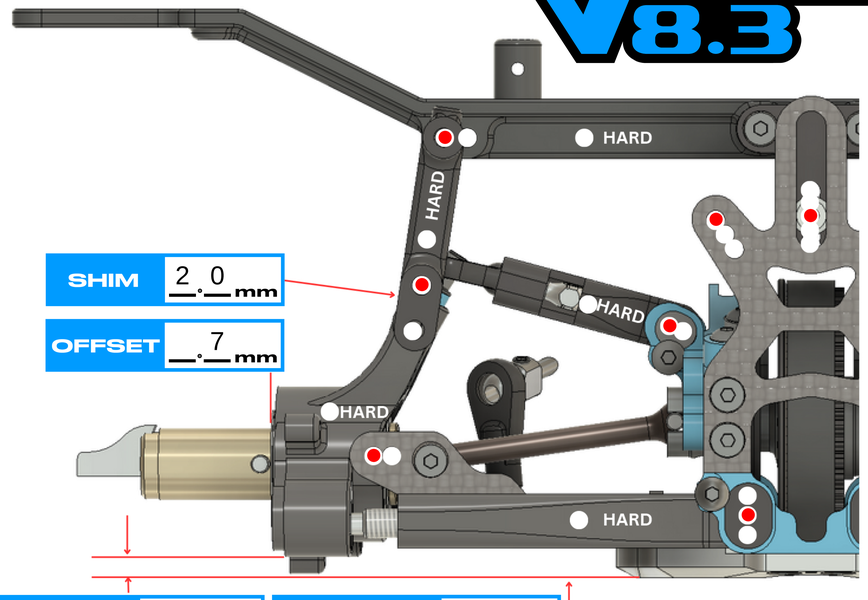

SHIM 2.0 mm

OFFSET 7 mm

DOWNSTOP 8.0 mm

RIDE HEIGHT 10 mm

CAMBER LEFT 3.0°

TOE IN/OUT 2.5°

CAMBER RIGHT 3.0°

WIDTH 260 mm

LONG ○ MEDIUM ✔ SHORT ○

8mm ○ 9mm ○ 10mm ●

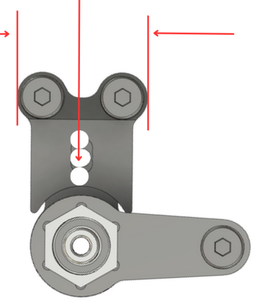

UPRIGHT INSERTS: F ○ R ○

AERO DISCS: F ○ R ○

ENGINE	Gimar Saturn 7T	PIPE	OS 2196		
MANIFOLD	MR 04	GLOWPLUG	OS RP7	FUEL	Maxima

NOTES

15gr weight under rear belt

10gr weight right behind front bumper

1800mAh LiPo battery