SHEPHERD
MICRO RACING TEAM

VELOX 8.3

NAME	CORREGE Bastien
DATE	09/11/25
EVENT	Monteux GP
TRACK	MVRC (Monteux France)
AIR TEMP	18
TRACTION	High
BEST LAP	16.828

CASTER 0.0 mm

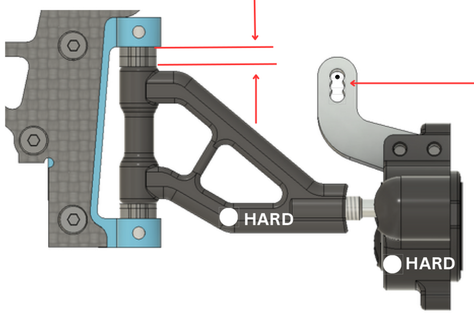

UPRIGHT INSERTS: CENTRIC ✓ / EXCENTRIC ○

BUMP STEER 1.0 mm

FRONT ONEWAY POSITION

	HIGH		LOW
BELT	210mm	210mm ✓	207mm
BELT	210mm	210mm	207mm

FRONT — REAR

ACTIVE ○ SHIM ___ mm

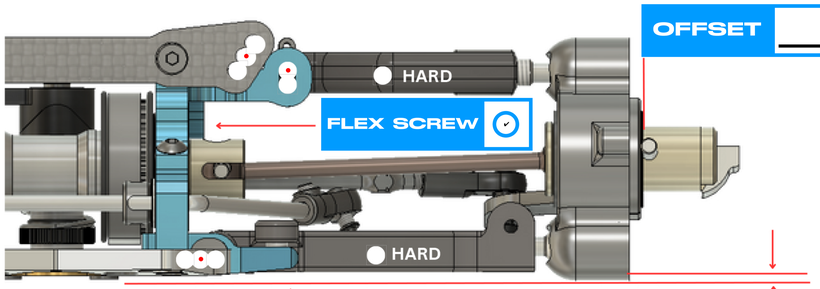

FLEX SCREW ✓

OFFSET ___.___ mm

RIDE HEIGHT 8.0 mm

DOWNSTOP -1.0 mm

WHEELBASE: LONG ○ SHORT ○

TOE IN/OUT -1.0°

WIDTH 252.___ mm

CAMBER LEFT 1.5°

CAMBER RIGHT 1.5°

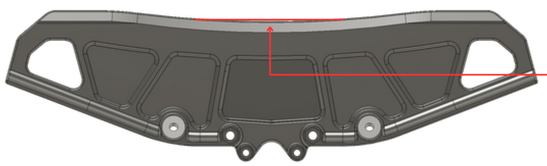

BODY: Hyper Diablo

DISTANCE TO BUMPER: PC mm

AWS BATTERY TRAY ○

CARBON ✓ BRASS ○ | CARBON ○ BRASS ○ | CARBON ○ BRASS ✓

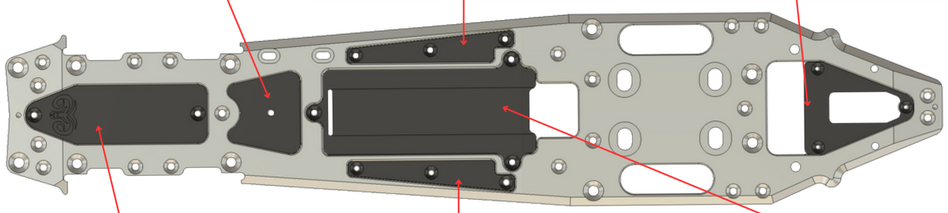

CARBON ○ BRASS ✓ | CARBON ○ BRASS ○ | CARBON ✓ BRASS ○

FRONT LEFT	FRONT RIGHT	TYRES	REAR LEFT	REAR RIGHT
HotRace		BRAND	HotRace	
32		SHORE	35	
69		DIAMETER	76	
		ADDITIVE		

SHOCKS

white mugen	SPRINGS	green Capricorn
800	OIL	800
std	PISTON	std
1	HOLE	2
std	FP SPRING	std

ANTI-ROLL BAR

FRONT 2.4 mm REAR 3.0 mm

FRONT AXLE

SOLID ○ SPLIT • 90 DEG ○ STR ○

CLUTCH

TYPE	Shepherd
SHOE	Yellow
PRELOAD	0.95
GAP	0.7

GEAR RATIO

1ST 19 / 62 2ND 24 / 57

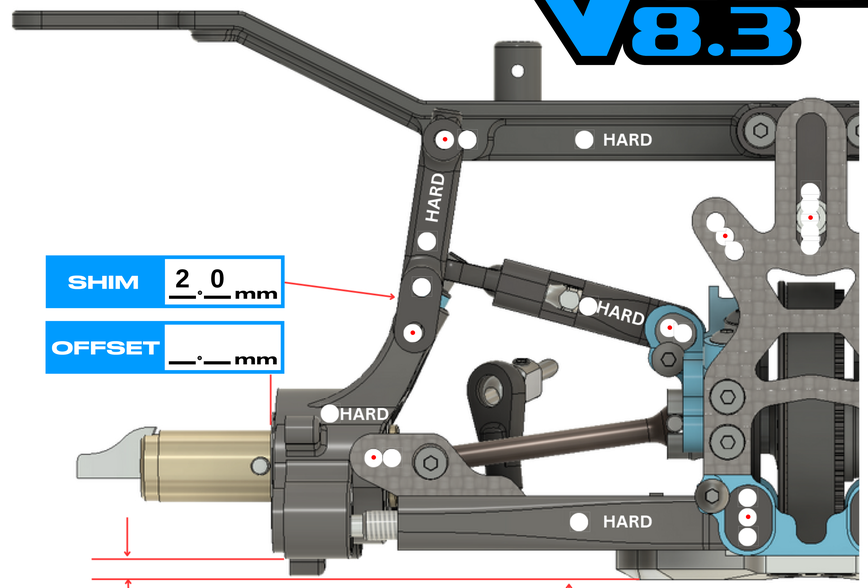

SHIM 2.0 mm

OFFSET ___.___ mm

DOWNSTOP 8.0 mm

RIDE HEIGHT 9.5 mm

CAMBER LEFT 3.0°

CAMBER RIGHT 3.5°

TOE IN/OUT 2.5°

WIDTH 260.0 mm

LONG ✓ / MEDIUM ○ / SHORT ○

8mm ○ 9mm ○ 10mm •

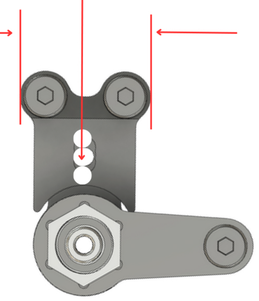

UPRIGHT INSERTS: F ○ R ○

AERO DISCS: F ○ R ○

ENGINE	OS	PIPE	OS 2196		
MANIFOLD	MR04	GLOWPLUG	RP7	FUEL	Maxima

NOTES

10g under rear belt
20g (2 x 10g) on rear lower axle inserts