SHEPHERD
MICRO RACING TEAM

VELOX 8.3

NAME	Andy Hastings
DATE	18/05/2025
EVENT	BRCA Round 3
TRACK	Adur
AIR TEMP	
TRACTION	
BEST LAP	

CASTER 4 mm

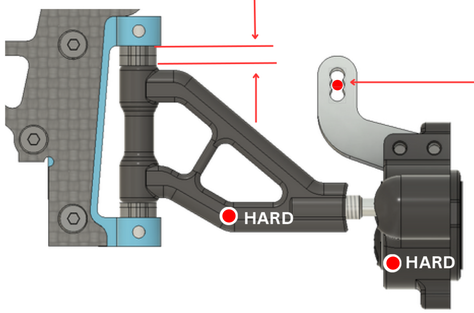

UPRIGHT INSERTS: CENTRIC ✔ EXCENTRIC ○

BUMP STEER 0 mm

FRONT ONEWAY POSITION

	HIGH		
BELT	210mm ✔	210mm	207mm
FRONT — REAR			
BELT	210mm	210mm	207mm
		LOW	

ACTIVE ○ SHIM ___ mm

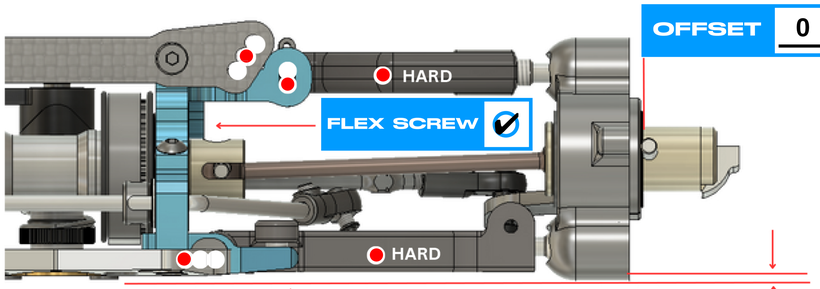

FLEX SCREW ✔

OFFSET 0.5 mm

RIDE HEIGHT 9 mm

DOWNSTOP -.1 mm

WHEELBASE: LONG ○ SHORT ✔

TOE IN/OUT +.1°

CAMBER LEFT 2 °

WIDTH 252 mm

CAMBER RIGHT 2 °

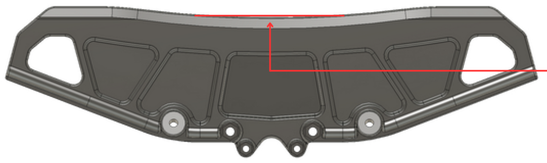

BODY: Hyper Diablo

DISTANCE TO BUMPER PC mm

AWS BATTERY TRAY ○

CARBON ○ BRASS ○ | CARBON ○ BRASS ✔ | CARBON ○ BRASS ○

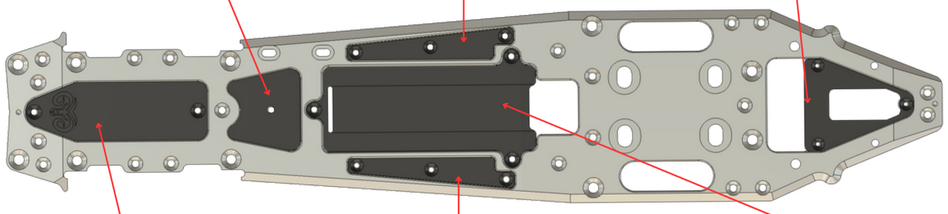

CARBON ○ BRASS ✔ | CARBON ○ BRASS ✔ | CARBON ✔ BRASS ○

FRONT / REAR

FRONT LEFT	FRONT RIGHT		REAR LEFT	REAR RIGHT
Ulti	Ulti	BRAND	Ulti	Ulti
Med	Med	SHORE	Med	Med
69	69	DIAMETER	76	76
		ADDITIVE		

SHOCKS

Shep Black V1	SPRINGS	Shep Black V1
650	OIL	1000
1.2	PISTON	1.2 &1
1	HOLE	2
Soft	FP SPRING	Soft

ANTI-ROLL BAR

FRONT 2.6 mm REAR 2.8 mm

FRONT AXLE

SOLID ○ SPLIT ● 90 DEG ○ STR ○

CLUTCH

TYPE	Reverse
SHOE	Yellow
PRELOAD	
GAP	0.6

GEAR RATIO

1ST 19 / 62 2ND 24 / 58

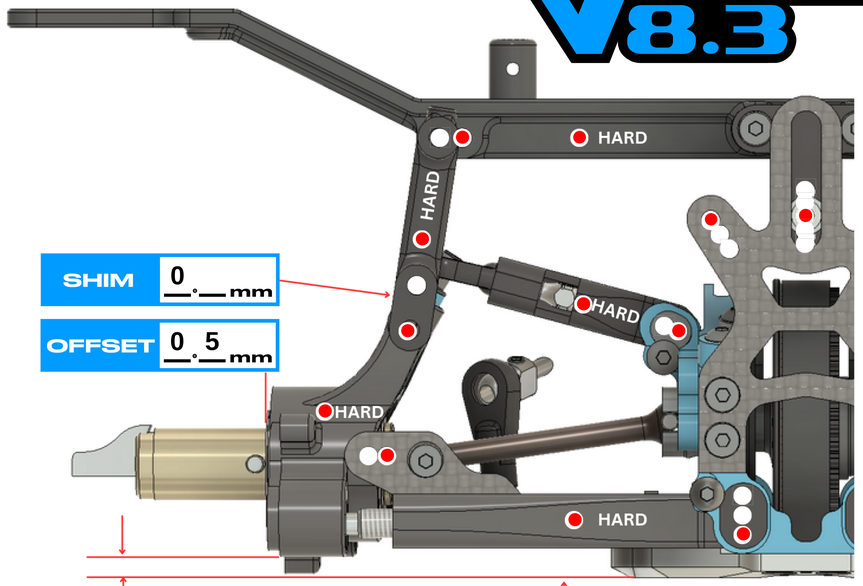

SHIM 0 mm

OFFSET 0.5 mm

DOWNSTOP 7 mm

RIDE HEIGHT 10 mm

CAMBER LEFT 3 °

TOE IN/OUT 3 °

CAMBER RIGHT 3 °

WIDTH 261 mm

LONG ✔ MEDIUM ○ SHORT ○

8mm ○ 9mm ○ 10mm ○

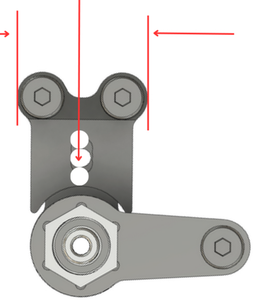

UPRIGHT INSERTS: F ○ R ●

AERO DISCS: F ○ R ○

ENGINE	Nova X9R	PIPE	Max 2164
MANIFOLD	Max 2099	GLOWPLUG	
FUEL			

NOTES

30g Brass in front of engine
Front Eccentics Up
Rear Eccentrics Up
Kit Ackerman