SHEPHERD
MICRO RACING TEAM

VELOX 8.3

NAME	Alex Esser
DATE	November 6-9
EVENT	Cowpatty Classic
TRACK	Nuggets Ranch Raceway
AIR TEMP	80
TRACTION	high
BEST LAP	14.0

CASTER 4 .__ mm

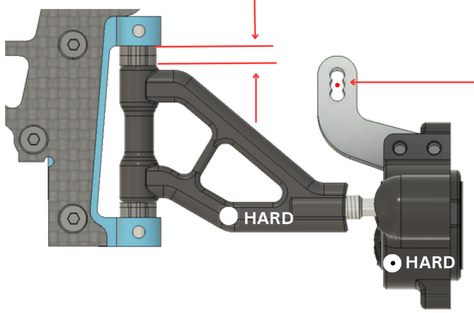

UPRIGHT INSERTS: CENTRIC ○ EXCENTRIC ✓

BUMP STEER 2 .__ mm

FRONT ONEWAY POSITION

	HIGH		
BELT	210mm	210mm	207mm
FRONT — REAR			
BELT	210mm	210mm	207mm
		LOW	

ACTIVE ○ SHIM ___ mm

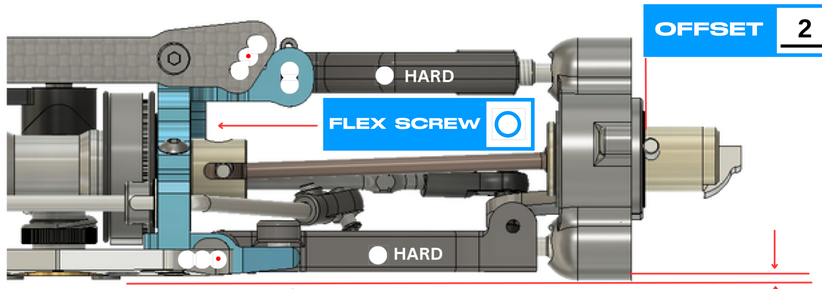

FLEX SCREW ○

OFFSET 2 .__ mm

RIDE HEIGHT 9 .__ mm

DOWNSTOP +1 .__ mm

WHEELBASE: LONG ✓ SHORT ○

TOE IN/OUT 1 .__ °

CAMBER LEFT 1 .__ °

WIDTH 258 .__ mm

CAMBER RIGHT 1 .__ °

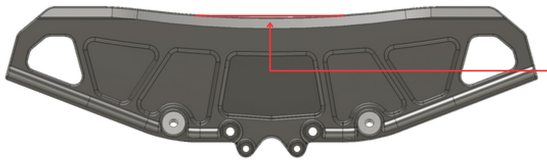

BODY: Hyper Diablo

DISTANCE TO BUMPER 15 mm

AWS BATTERY TRAY ○

CARBON ○ BRASS ○ | CARBON ✓ BRASS ○ | CARBON ○ BRASS ○

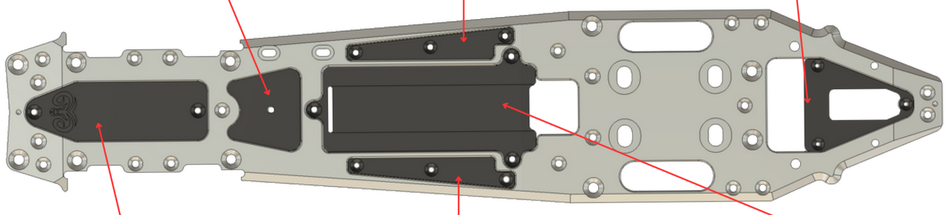

CARBON ○ BRASS ○ | CARBON ✓ BRASS ○ | CARBON ✓ BRASS ○

FRONT / REAR

FRONT LEFT	FRONT RIGHT	TYRES	REAR LEFT	REAR RIGHT
Matrix	Matrix	BRAND	Matrix	Matrix
32	32	SHORE	35	35
68	68	DIAMETER	75	75
		ADDITIVE		

SHOCKS

Kit	SPRINGS	kit
650	OIL	650
kit	PISTON	kit
1	HOLE	2
Hard	FP SPRING	Hard

ANTI-ROLL BAR

FRONT 2.4 mm REAR 2.4 mm

FRONT AXLE

SOLID ○ SPLIT • 90 DEG ○ STR ○

CLUTCH

TYPE	Shepherd
SHOE	yellow
PRELOAD	0.8
GAP	0.55

GEAR RATIO

1ST 19 / 62 2ND 24 / 58

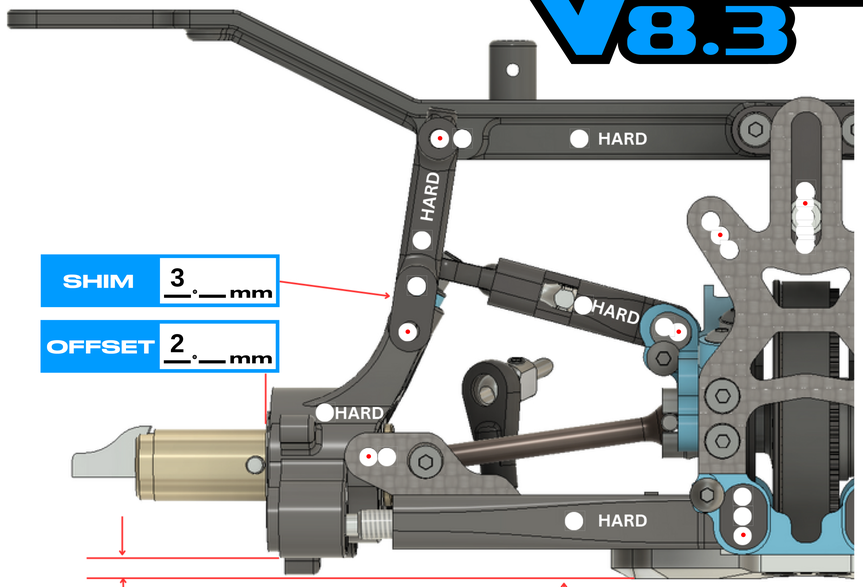

SHIM 3 .__ mm

OFFSET 2 .__ mm

DOWNSTOP 8 .__ mm

RIDE HEIGHT 10 .__ mm

CAMBER LEFT 3 .__ °

TOE IN/OUT 3 .__ °

CAMBER RIGHT 3 .__ °

WIDTH 264 .__ mm

LONG ○ MEDIUM ○ SHORT ✓

8mm ○ 9mm ○ 10mm •

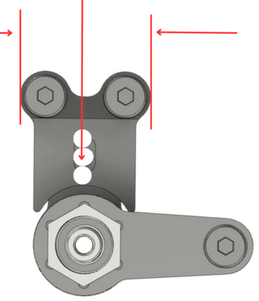

UPRIGHT INSERTS: F ○ R ○

AERO DISCS: F ○ R ○

ENGINE	Max power 351	PIPE	Max power 2183		
MANIFOLD	maxpower 02099	GLOWPLUG	O.S	FUEL	VP 16%

NOTES

Brilliant Titanium Hinge Pins
Brilliant Titanium Screws
LHO Carbon Rear Body Mount
Low Friction Pulleys