Driver Details

NAME	Olly Jefferies
DATE	13/10/19
EVENT / TRACK	MICC Rd1
WEATHER	
RESULT	2nd
FASTEST LAP TIME	13.4

Chassis and Electrics

CHASSIS	Mid ■	Alloy ■	Carbon ☐
TOP DECK		Vertical ☐	Horizontal ☐
BODYSHELL	PF Type S Pro Lite		
WING	MR33 0.7mm		
E.S.C	HW XR10		
SERVO	Highest		
RECEIVER	SANWA		
LIPO	Sunpadow 5300		

Track Conditions

GRIP LEVEL	High ☐	Medium ■	Low ☐
TYPE	Tight ☐	Open ☐	Mixed ■
SURFACE	Carpet ■	Tarmac ☐	
CONDITION	Smooth ■	Bumpy ☐	
AIR TEMPERATURE	°C °F	TRACK TEMPERATURE	°C °F
VENUE	Indoor ■	Outdoor ☐	

Motor and Gearing

MOTOR	HW 4.5	
ROTOR DIAMETER	12.3	
TIMING	30	
GEAR PITCH	48DP ☐	64DP ■
SPUR SIZE	116	
PINION SIZE	29	

NOTES

- Top deck raised 0.75mm
- 1.8g Diff Oil
- 84g Body

Wheels, Tyres and Inserts

WHEELS					
TYRES	Volante 28				
INSERTS					
TYRE ADDITIVE	CS High Grip				
ADDITIVE TIME	Front 10	Minutes	Rear 10	Minutes	
TYRE WARMERS	Yes ☐	No ■	Temp °C	Time	Minutes

Topdeck Options

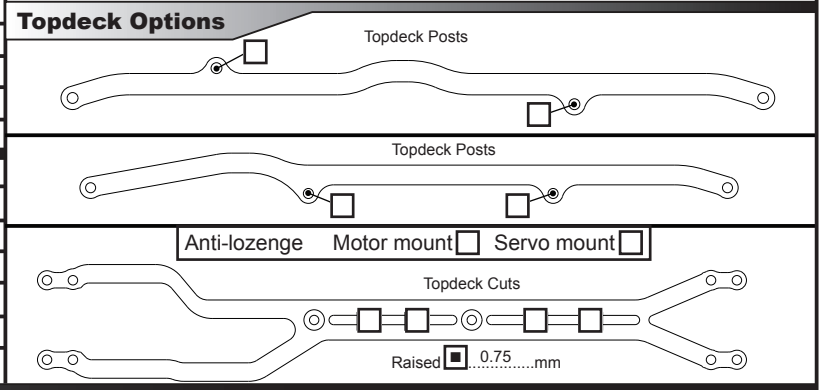

Front

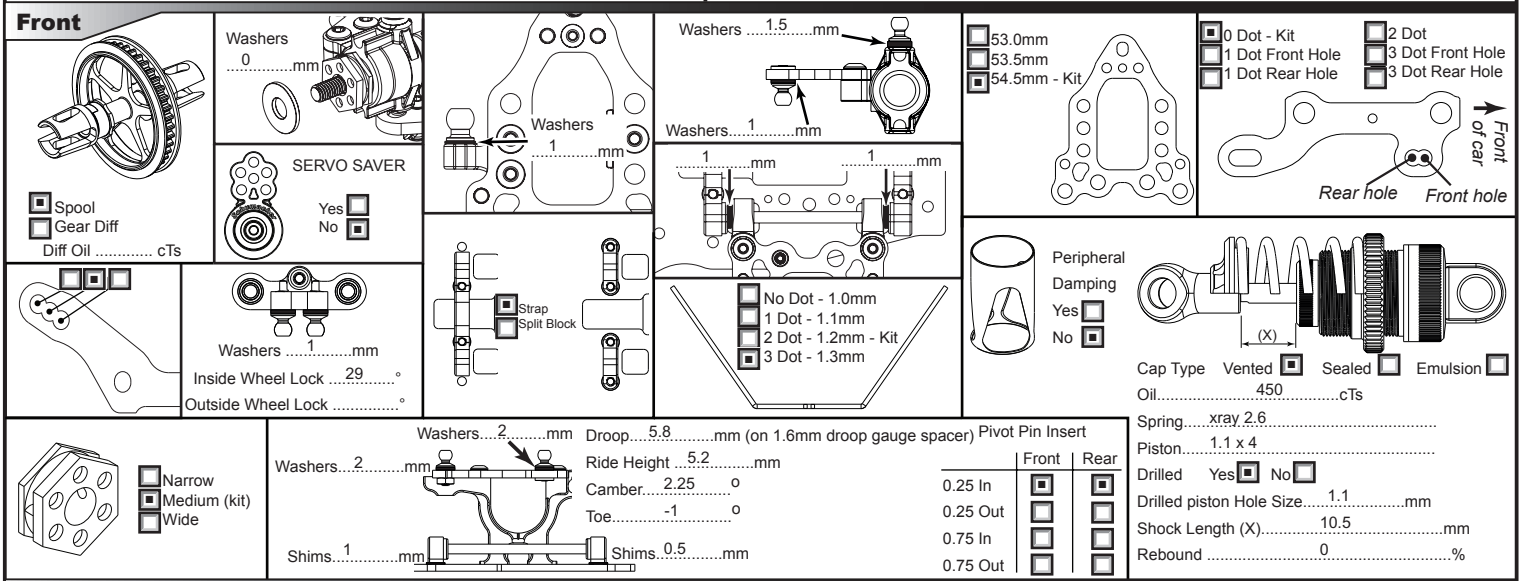

Rear

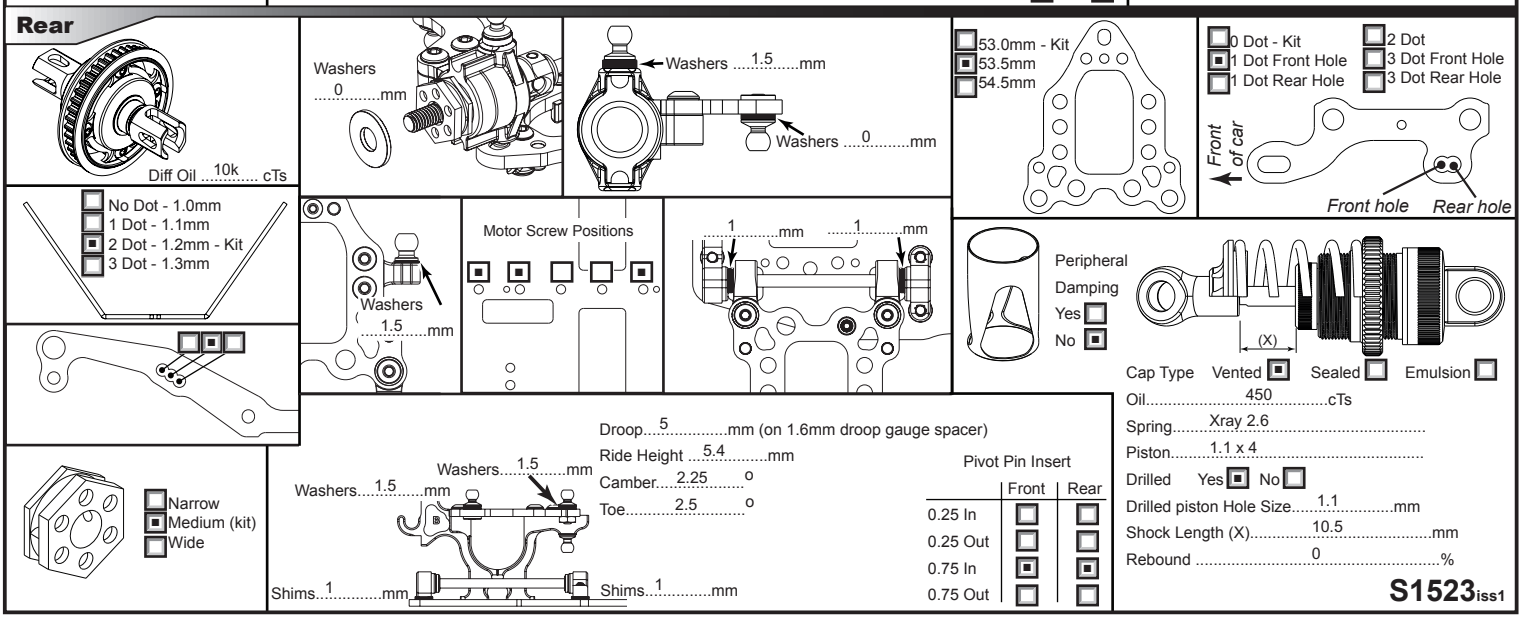

S1523 iss1