Driver Details

NAME	Chris Ashton
DATE	Dec 2020
EVENT / TRACK	Essex ICC
WEATHER	
RESULT	B Main
FASTEST LAP TIME	

Chassis and Electrics

CHASSIS	Mid ■	Alloy ■	Carbon ☐
TOP DECK		Vertical ☐	Horizontal ☐
BODYSHELL	DBX 0.5mm		
WING	DBX 0.7mm		
E.S.C	HW XR10 G2		
SERVO	Highest		
RECEIVER	KO		
LIPO	Intellect 4200 Shorty		

Track Conditions

GRIP LEVEL	High ■	Medium ☐	Low ☐
TYPE	Tight ☐	Open ☐	Mixed ■
SURFACE	Carpet ■	Tarmac ☐	
CONDITION	Smooth ☐	Bumpy ■	
AIR TEMPERATURE	°C °F	TRACK TEMPERATURE	°C °F
VENUE	Indoor ■	Outdoor ☐	

Motor and Gearing

MOTOR	HW 4.5	
ROTOR DIAMETER	12.3	
TIMING	28	
GEAR PITCH	48DP ■	64DP ☐
SPUR SIZE	87	
PINION SIZE	22	

NOTES

Shorty in rear position.
Core under LiPo weight.
35g in front of LiPo.
Core titanium screws.
10g under steering rack.
5g in centre.

Wheels, Tyres and Inserts

WHEELS					
TYRES	Volante 28				
INSERTS					
TYRE ADDITIVE	MR33 Green				
ADDITIVE TIME	Front 8	Minutes	Rear 10	Minutes	
TYRE WARMERS	Yes ☐	No ■	Temp °C	Time	Minutes

Topdeck Options

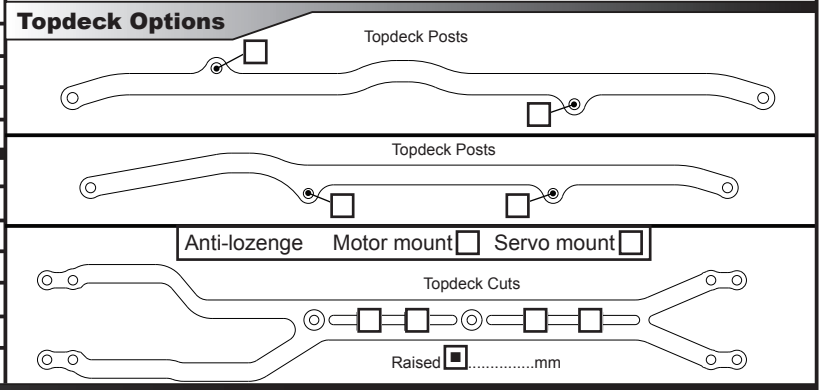

Front

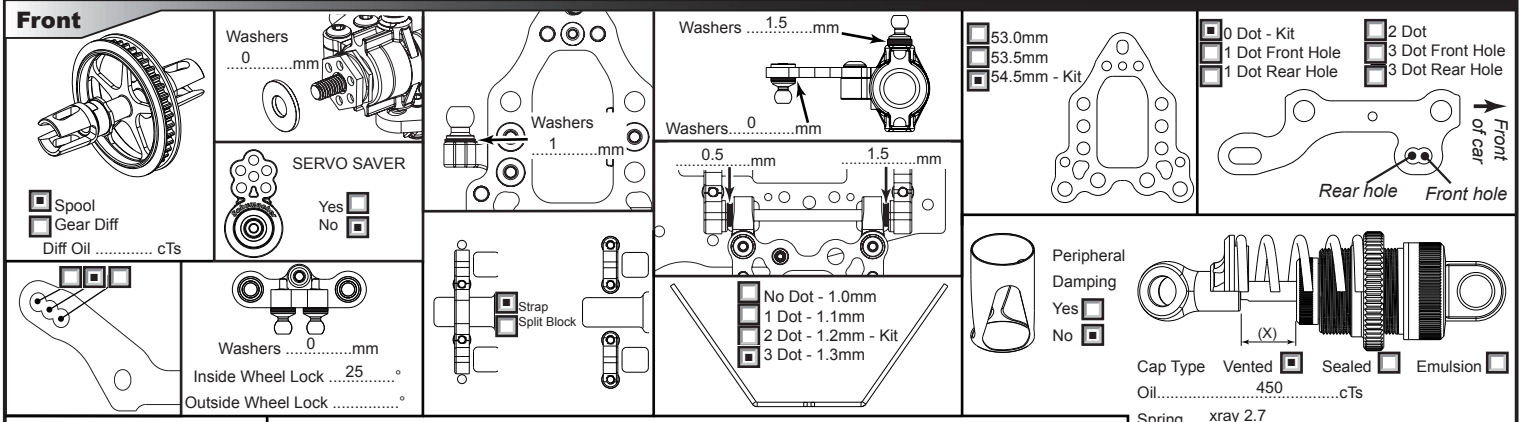

Rear

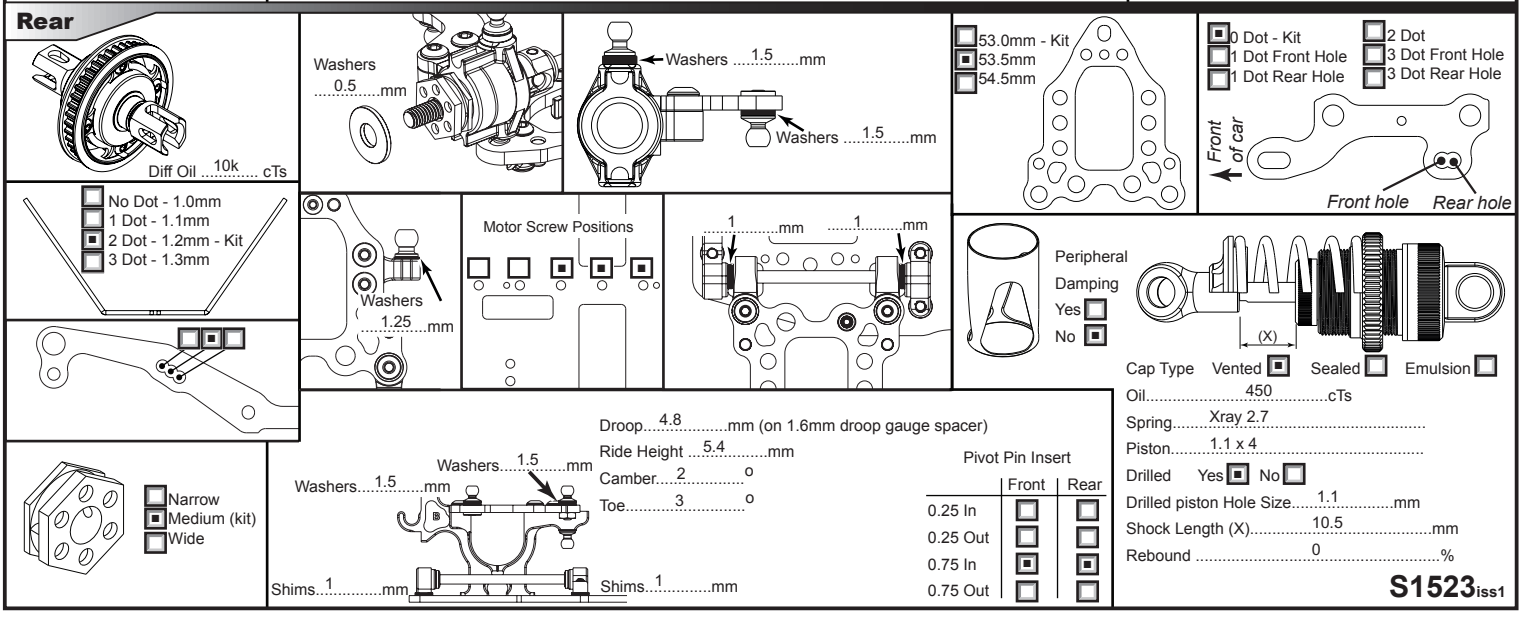

S1523iss1