S1794

Mi10

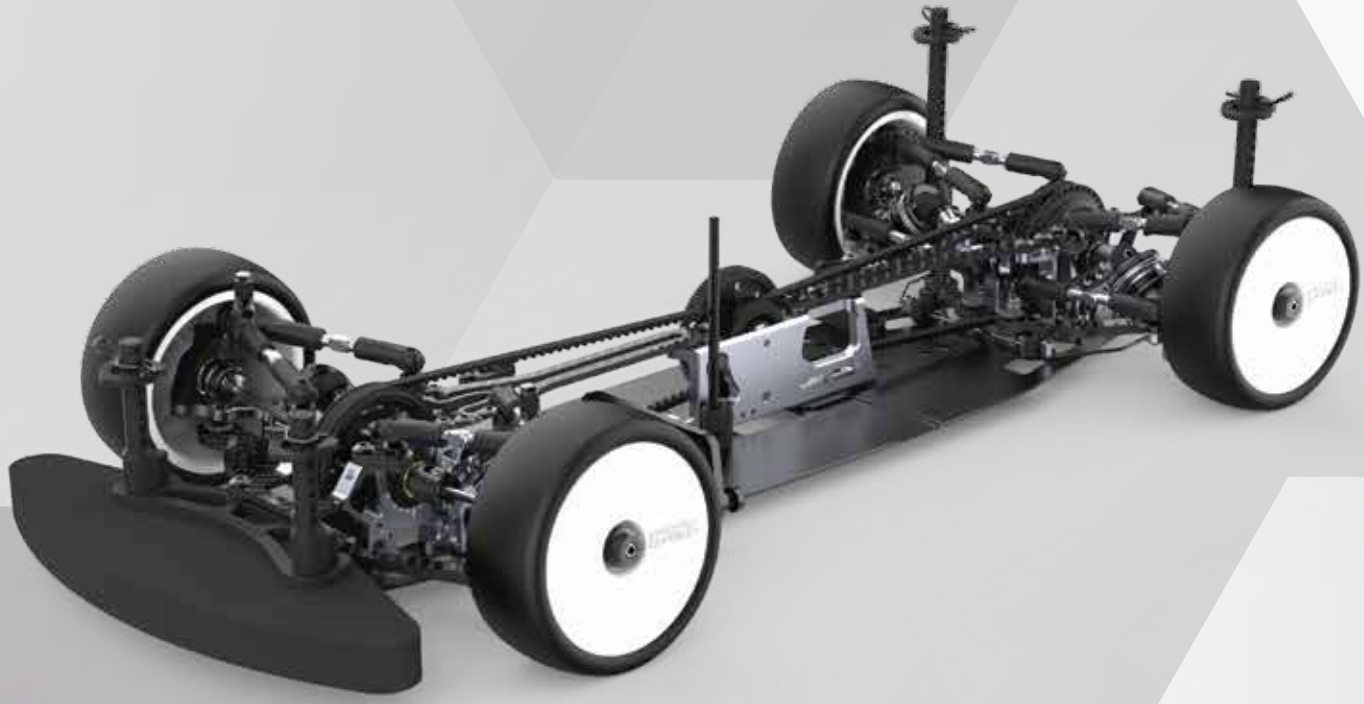

Instruction Manual ISS01

IFMAR 5 TIME WORLD CHAMPIONS
Schumacher

www.racing-cars.com

Schumacher
71-73 Tenter Road
Moulton Park
Northampton
NN3 6AX

IMPORTANT SAFETY NOTES

- We strongly recommend that anyone driving RC cars, or organising events, should obtain third party liability insurance. In the UK this can be done by joining the BRCA. www.brca.org
- This product is not suitable for children under the age of 14, without the direct supervision of a responsible adult.
- Select an area for assembly that is away from the reach of small children.
- The parts in this kit are small and can be swallowed by children causing choking and possible internal injuries.
- Exercise care when using hand tools and sharp instruments during assembly.
- Carefully read all manufacturers warnings and cautions for any additional items used in the construction.
- In line with our policy of continuous development the exact details of the kit may vary.
- DO NOT use this car on public roads or in places where it can interfere with traffic, people or animals.
- Always check the operation of the radio with the wheels off the ground, before using the car.
- Make sure the radio and car batteries are fully charged before use.
- Disconnect and remove the battery from the car when not in use.
- Always store and charge LiPo batteries in a fireproof container.
- DO NOT put fingers or any objects inside rotating or moving parts as this may cause injury.
- Make sure the charger is correctly set for the type of battery you are using.
- Incorrect charging may cause a fire.
- Insulate all exposed electrical wiring. Exposed or damaged wires can cause short circuits and fire.
- The motor and speed controller can become hot during use. DO NOT touch them immediately after using your car as this may cause injury.

ADDITIONAL ITEMS REQUIRED

2S LiPo Battery

Motor and Pinion Gear

Electronic Speed Controller

Battery Charger

Radio Equipment

Steering Servo

Tyre/CA Glue

Bodyshell

Polycarbonate Paint

Tyres and Inserts

Please note that the Steel Chassis is illustrated in this manual. Build the Carbon Fibre version using the same process unless illustrated.

C Carbon Chassis Hardware

S Steel Chassis Hardware

RECOMMENDED TOOLS REQUIRED

1.5mm Hex Driver - U2789

2.0mm Hex Driver - U2790

2.5mm Hex Driver - U2791

5.5mm M3 Nut Driver - U2795

7.0mm M4 Nut Driver - U2796

Body Reamer - CR797

Pliers - CR528

Side Cutters - CR527

Soldering Iron - CR275

Solder - U3107

Curved Scissors - CR044

Circlip Pliers - CR878

ICON KEYS

MOLY GREASE — CORE RC Molybdenum Grease 10ml - CR755.

THREAD LOCK BLUE — CORE RC Medium Strength Thread Lock 3ml - CR520.

SILICONE OIL cSt — Silicone oil, various cSt.

Important note. Please read.

Caution note. Please read.

FL — Front Left of car.

FR — Front Right of car.

RL — Rear Left of car.

RR — Rear Right of car.

SET UP SHEET — Reference to Track Settings Pages 29 to 33.

www.racing-cars.com

Mi10

Transmission Housings Assembly

BAG A - Step 1

A x2
Ball Stud Ultra Short

B x12 C
M3x 6 Csk Hd Screw

B x12 S
M3x 5 Csk Hd Screw 110°

Please note:
If you have a Steel kit and wish to change to a C/F chassis, you will also need U9552 - C/F Chassis Lower Screw Set - Mi10.
If you have a C/F kit and wish to change to a steel chassis, will also need U9551 - Steel Chassis Lower Screw Set - Mi10.

The Steel Chassis is illustrated in this manual. Build the Carbon Fibre version using the same process unless illustrated.

C Carbon Chassis Hardware
S Steel Chassis Hardware

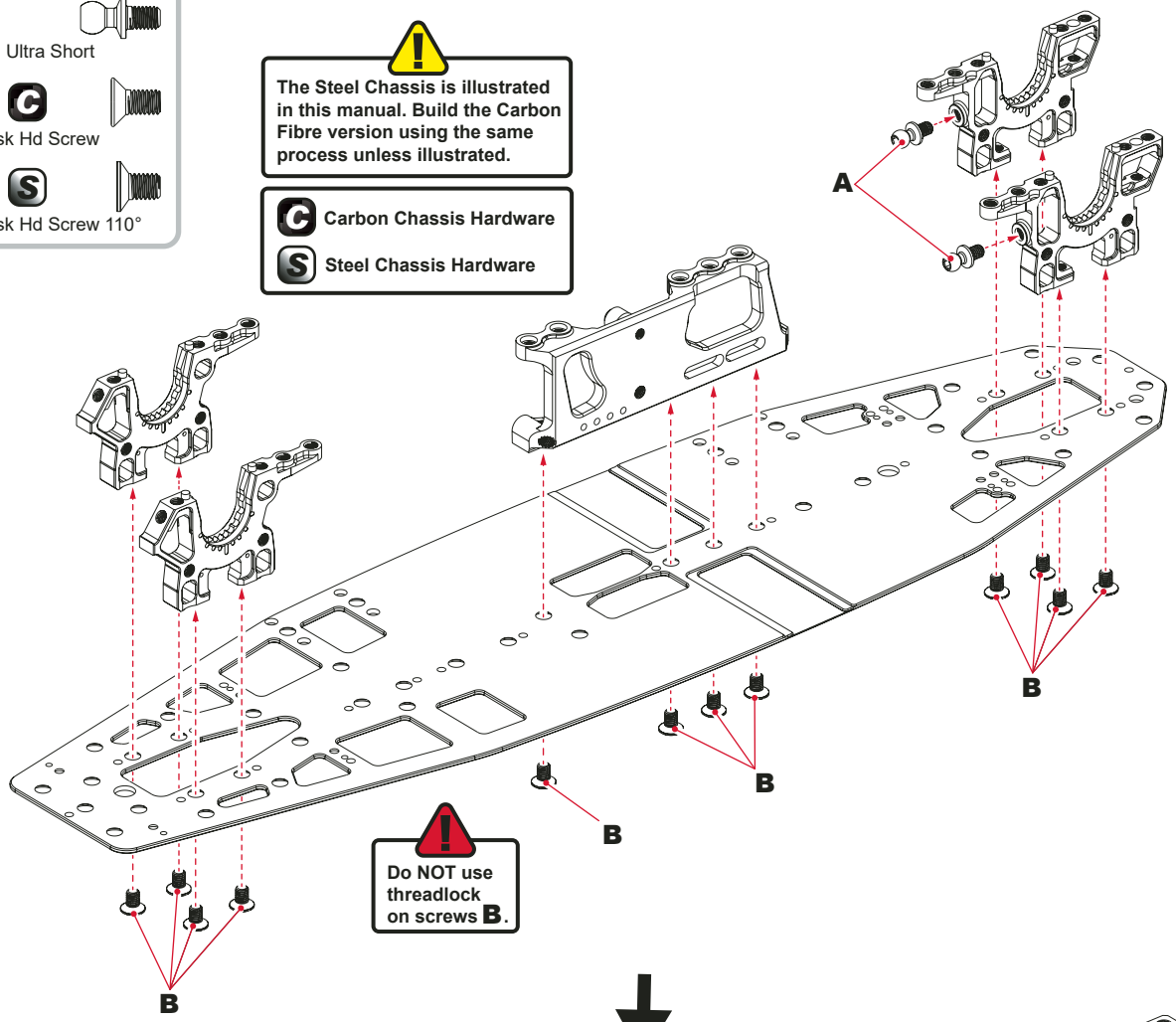

Do NOT use threadlock on screws B.

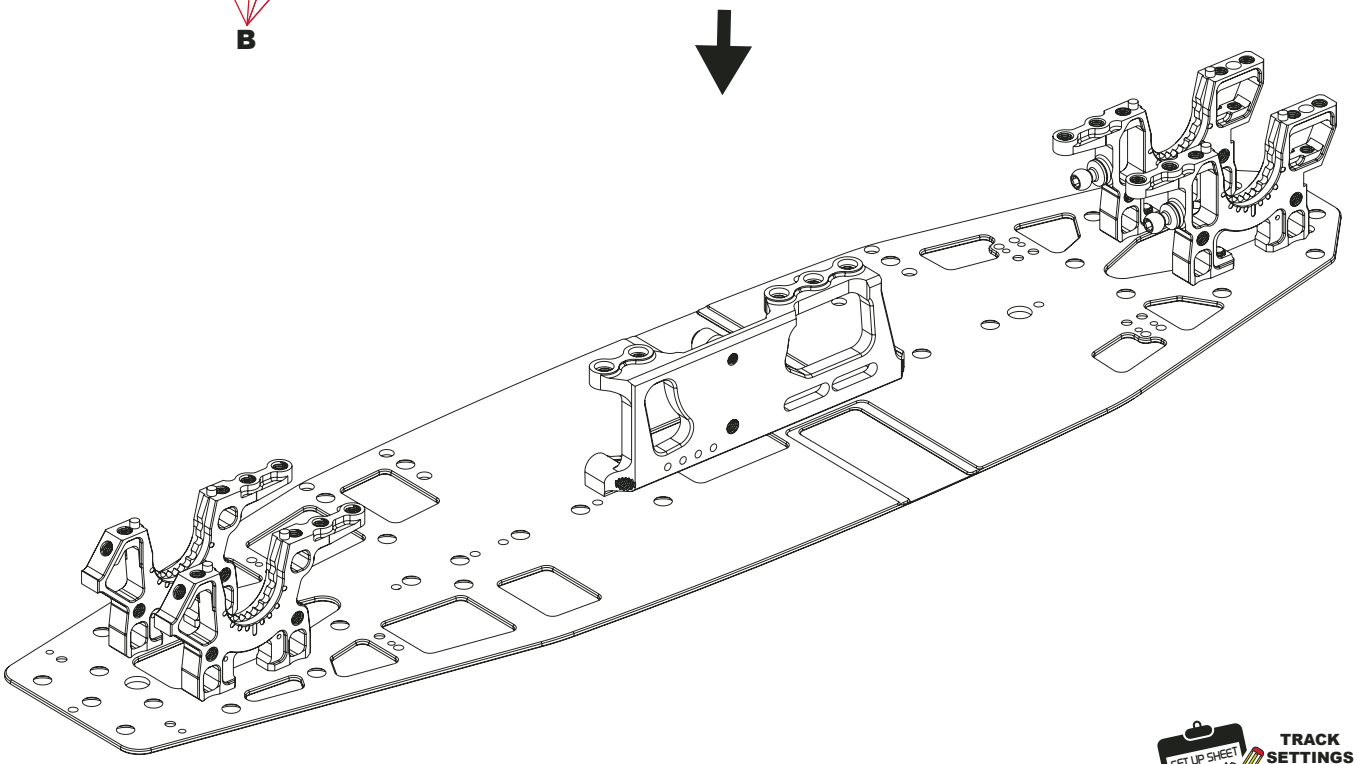

TRACK SETTINGS REFERENCE
Page 32

Mi10

Differential Assembly

BAG A - Step 2

A x2
'O' Ring 3.0 x 2.0

B x1
'O' Ring ø25.00 x 1.0

C x2
Shim ø5.1 x ø6.5 x 0.27

D x2
Bearing ø5 x ø8 x 2.5

E x2
'O' Ring ø7.00 x 1.0

F x2
Shim ø6.0 x ø7.7 x 0.1

G x2
Bearing ø6 x ø10 x 3

H x2
Pin ø1.5 x 7.5

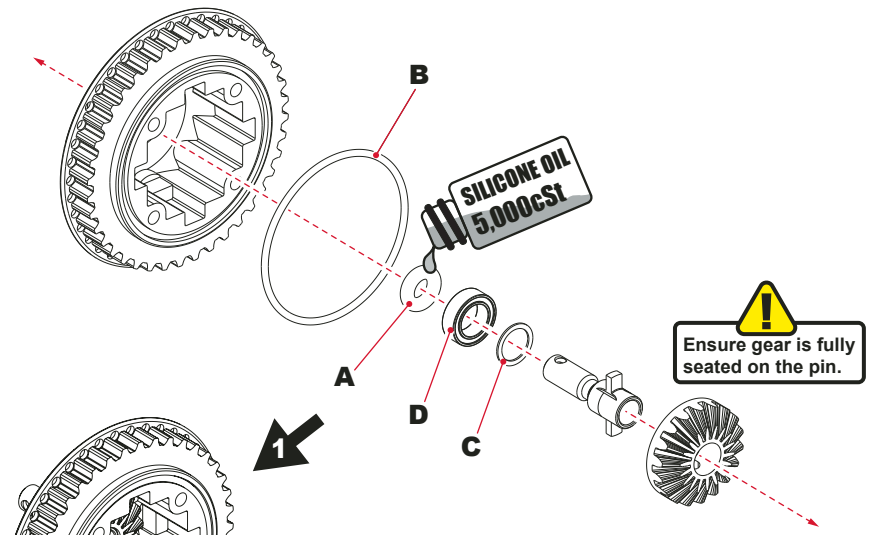

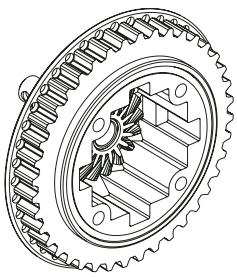

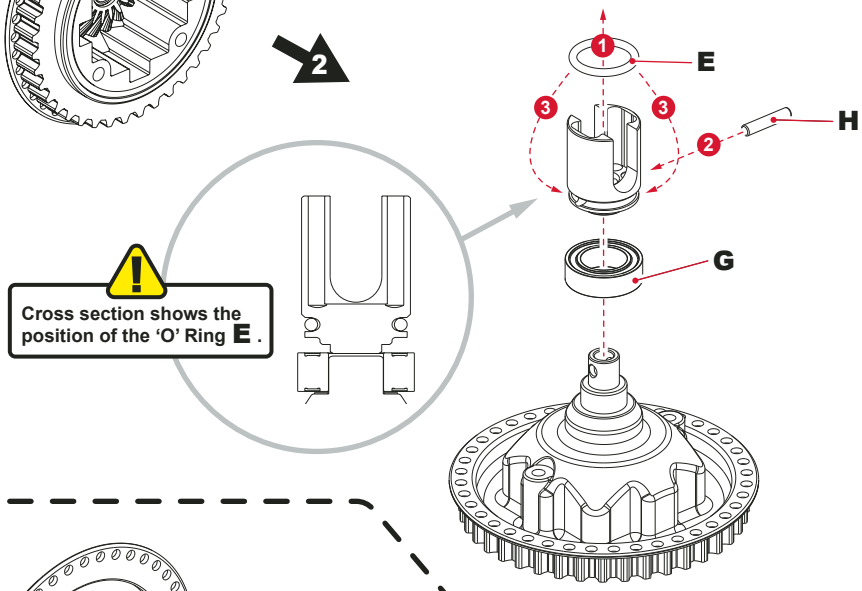

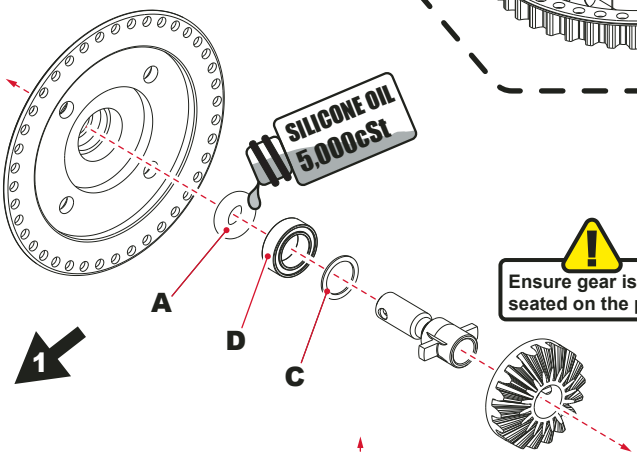

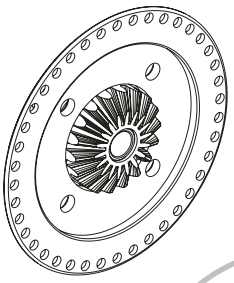

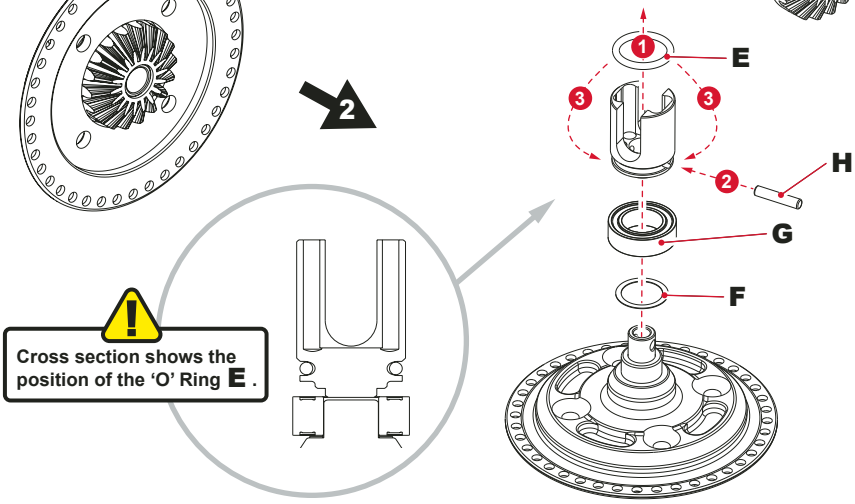

We recommend starting with one shim F . Remove it if more end float is required. Or if less end float is needed add another shim to the pulley side of diff.

Differential Assembly

BAG A - Step 3

A x4

M2.5 x 8 Csk Hd Screw

B x4

Shim ø3.5 x ø9.5 x 0.1

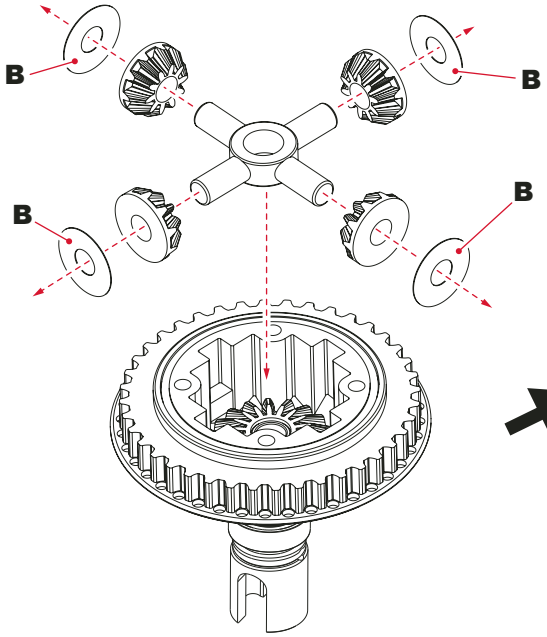

1

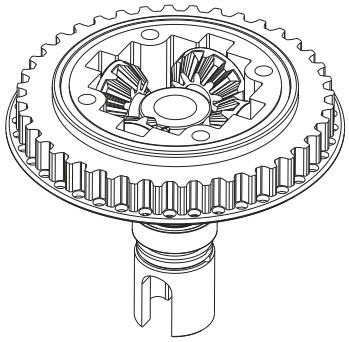

2

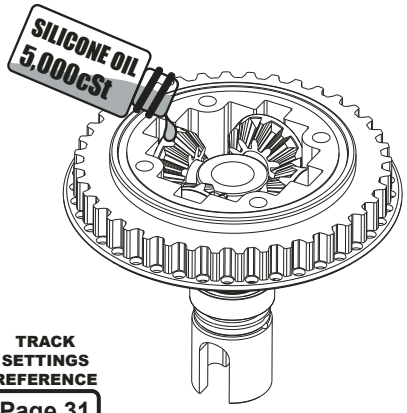

Use 1.6 grams of oil.
The alternative is to fill until the cross pin is covered.
DO NOT over fill.
Kit Setting is 5000cSt.

3

TRACK SETTINGS REFERENCE
Page 31

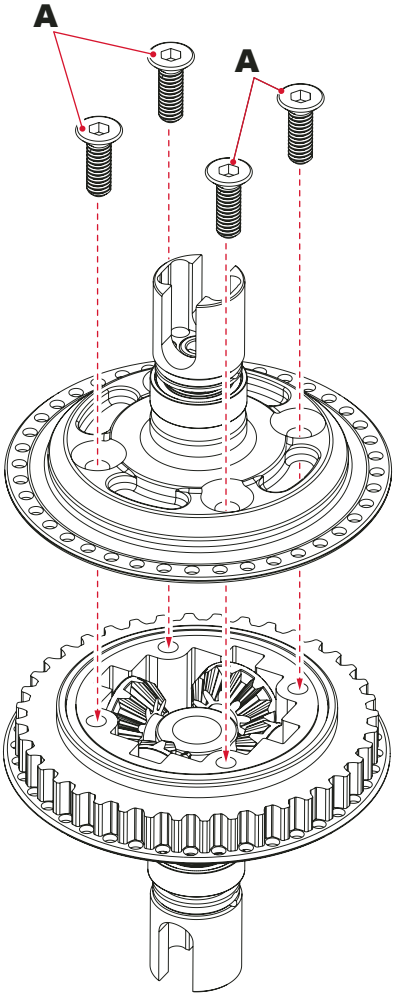

4

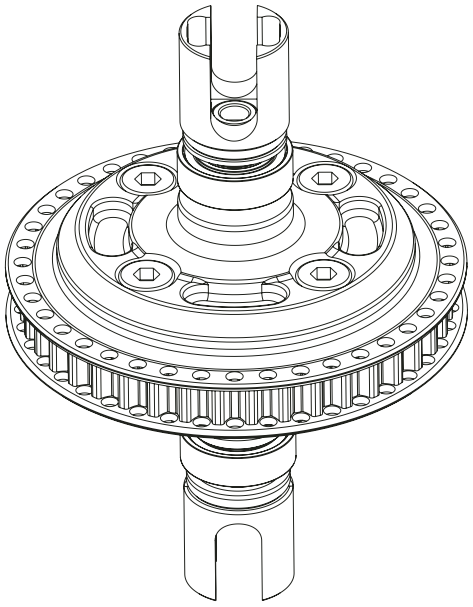

Differential Fitting

BAG A - Step 3

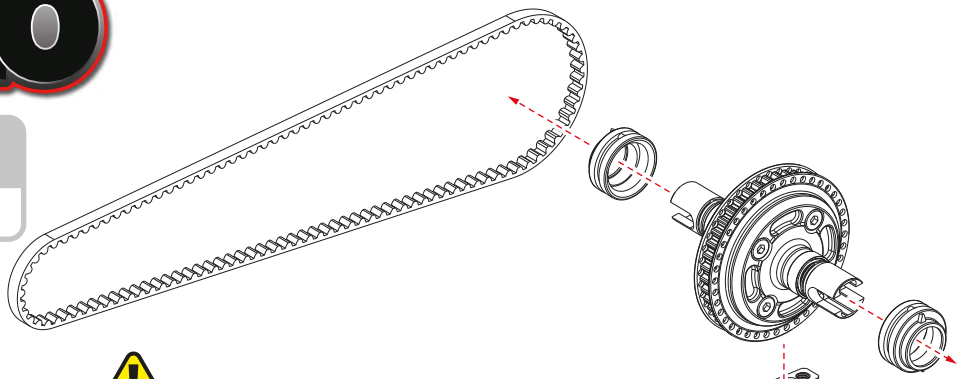

Make note of the position of the eccentric housings. They adjust belt tension and must be the same both sides. The recommended starting position is shown.

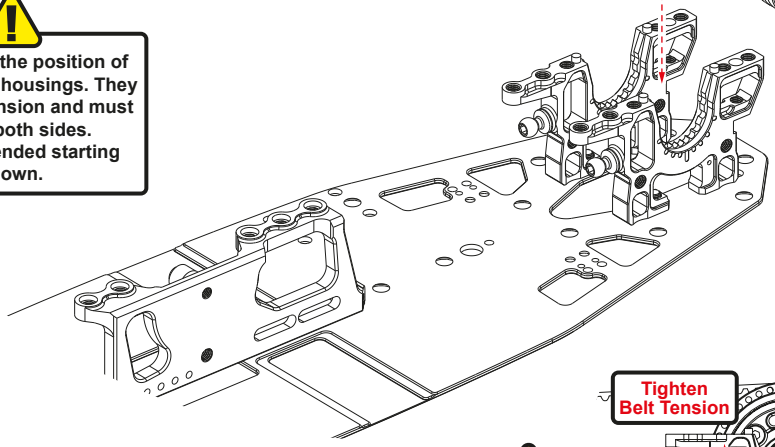

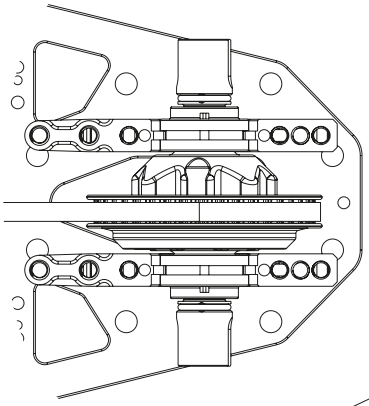

TRACK SETTINGS REFERENCE
Page 32

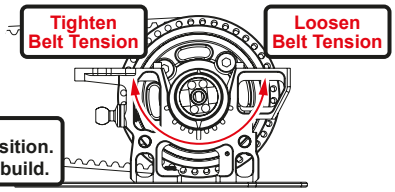

Diff set in HIGH position. Recommended kit build.

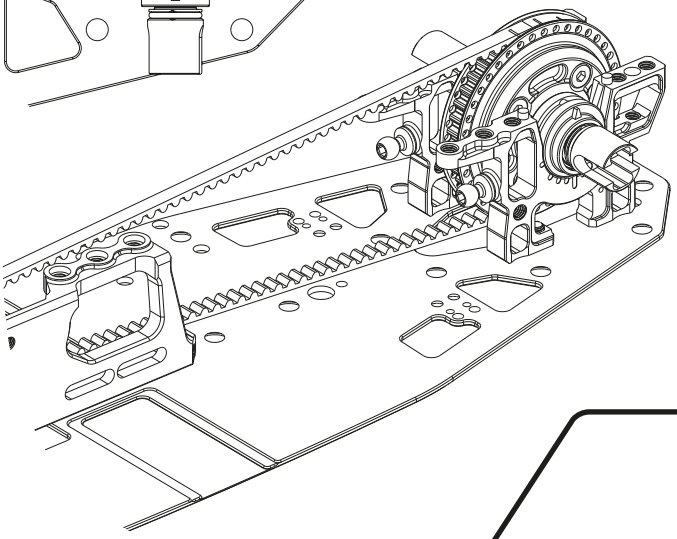

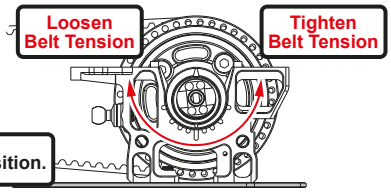

Diff set in LOW position.

Front Spool Assembly

BAG A - Step 4a

A x2
M3x 8 Csk Hd Screw

B x3
M3x 5 Pan Hd Screw

C x2
Shim ø6.0 x ø7.7 x 0.1

D x2
Bearing ø6 x ø10 x 3

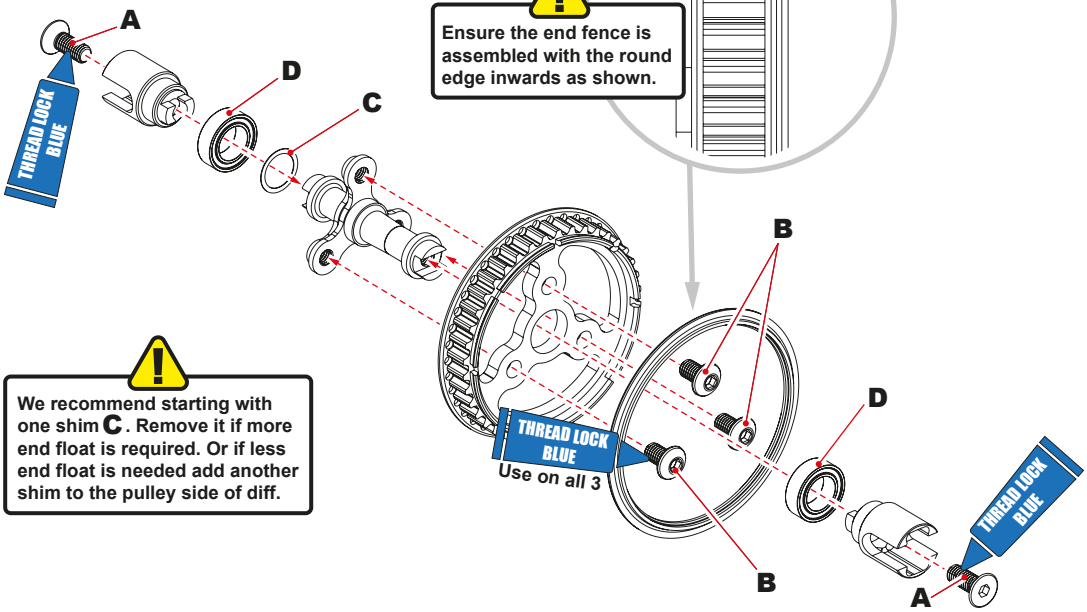

Ensure the end fence is assembled with the round edge inwards as shown.

We recommend starting with one shim **C**. Remove it if more end float is required. Or if less end float is needed add another shim to the pulley side of diff.

Mi10

Front Spool Fitting

BAG A - Step 4b

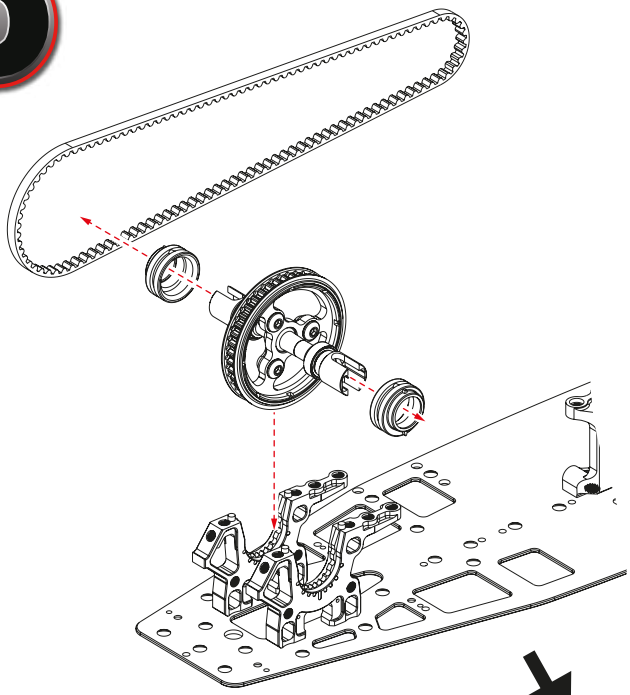

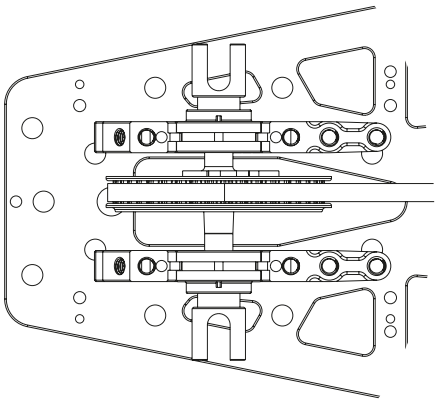

Make note of the position of the eccentric housings. They adjust belt tension and must be the same both sides. The recommended starting position is shown.

TRACK SETTINGS REFERENCE Page 32

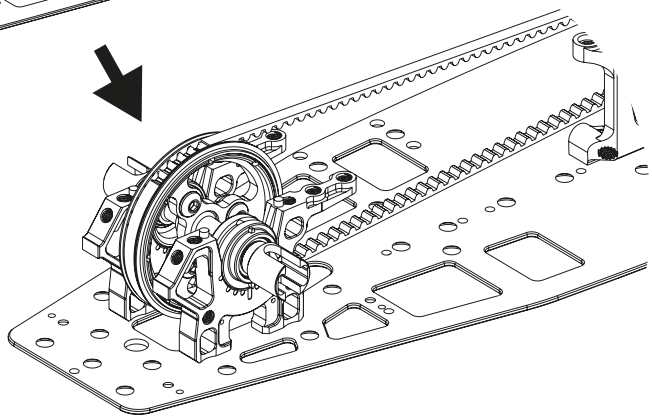

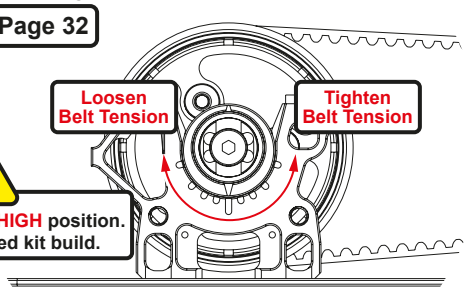

Spool set in HIGH position. Recommended kit build.

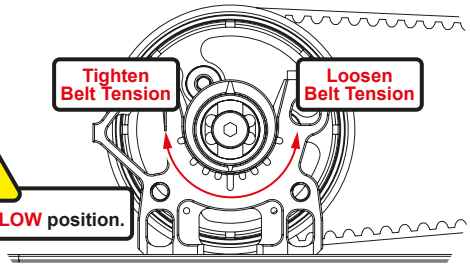

Spool set in LOW position.

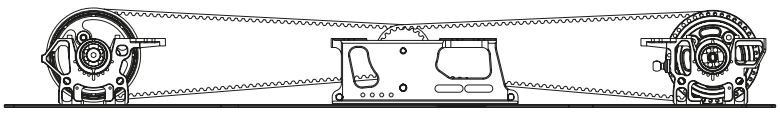

Pulley & Spur Assembly

BAG A - Step 5

A x1
M3x 10 Button Hd Screw

B x1
M2.6x 12 Button Hd Screw

C x3
Bearing ø4 x ø8 x 3

D x1
Bearing ø6 x ø10 x 3

E x3
Spur Gear Screw

F x2
1/4" x 5/16" Shim

We recommend starting with no shims **F**. Add if there is too much end float.

TRACK SETTINGS REFERENCE Page 34/35

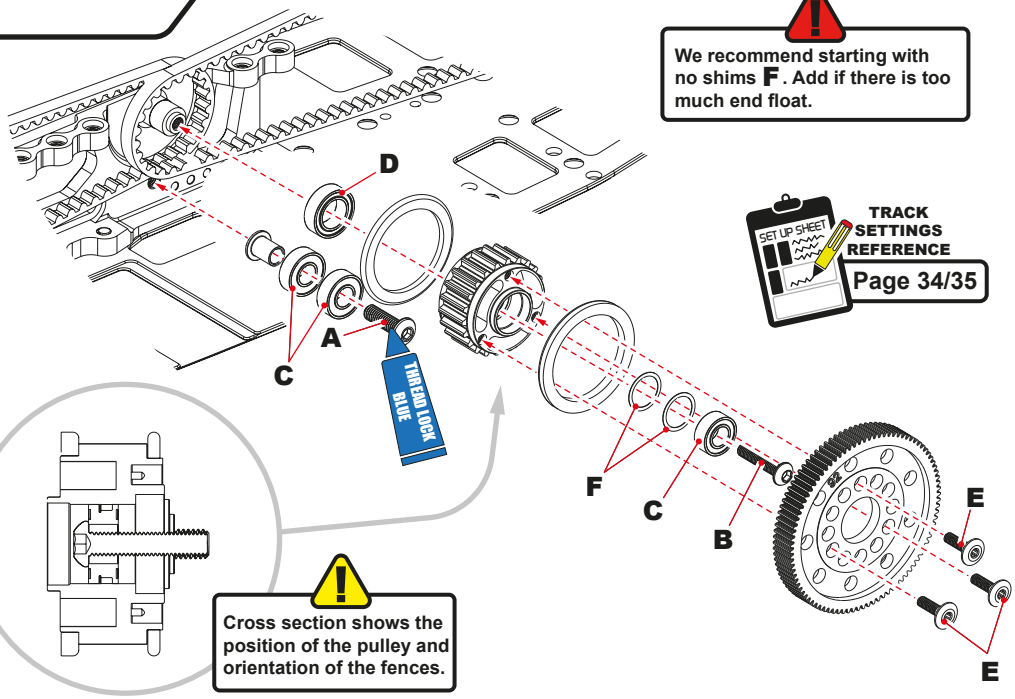

Cross section shows the position of the pulley and orientation of the fences.

Pulley & Spur Complete

BAG A - Step 5

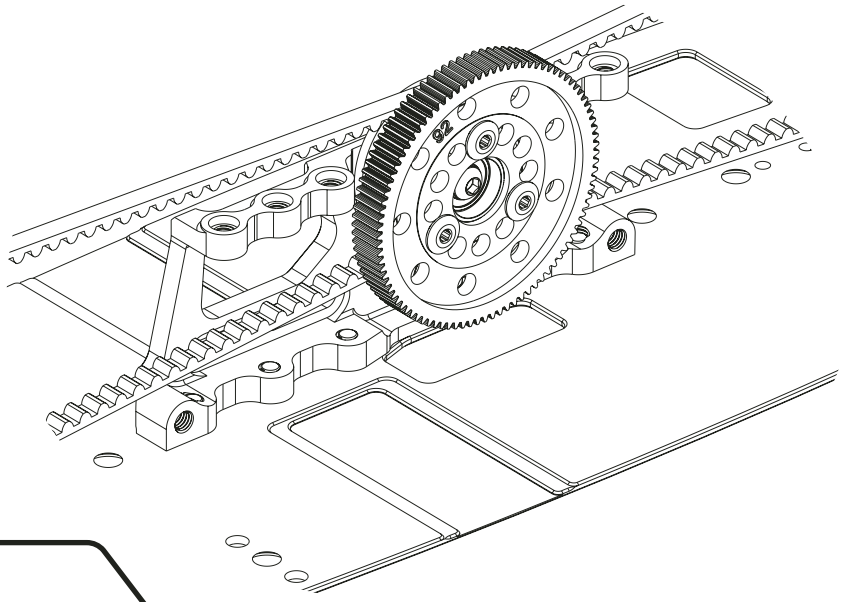

Top Deck Assembly

BAG A - Step 6

A x11

M3x 6 Button Hd Screw

B x3

Dowel Bush

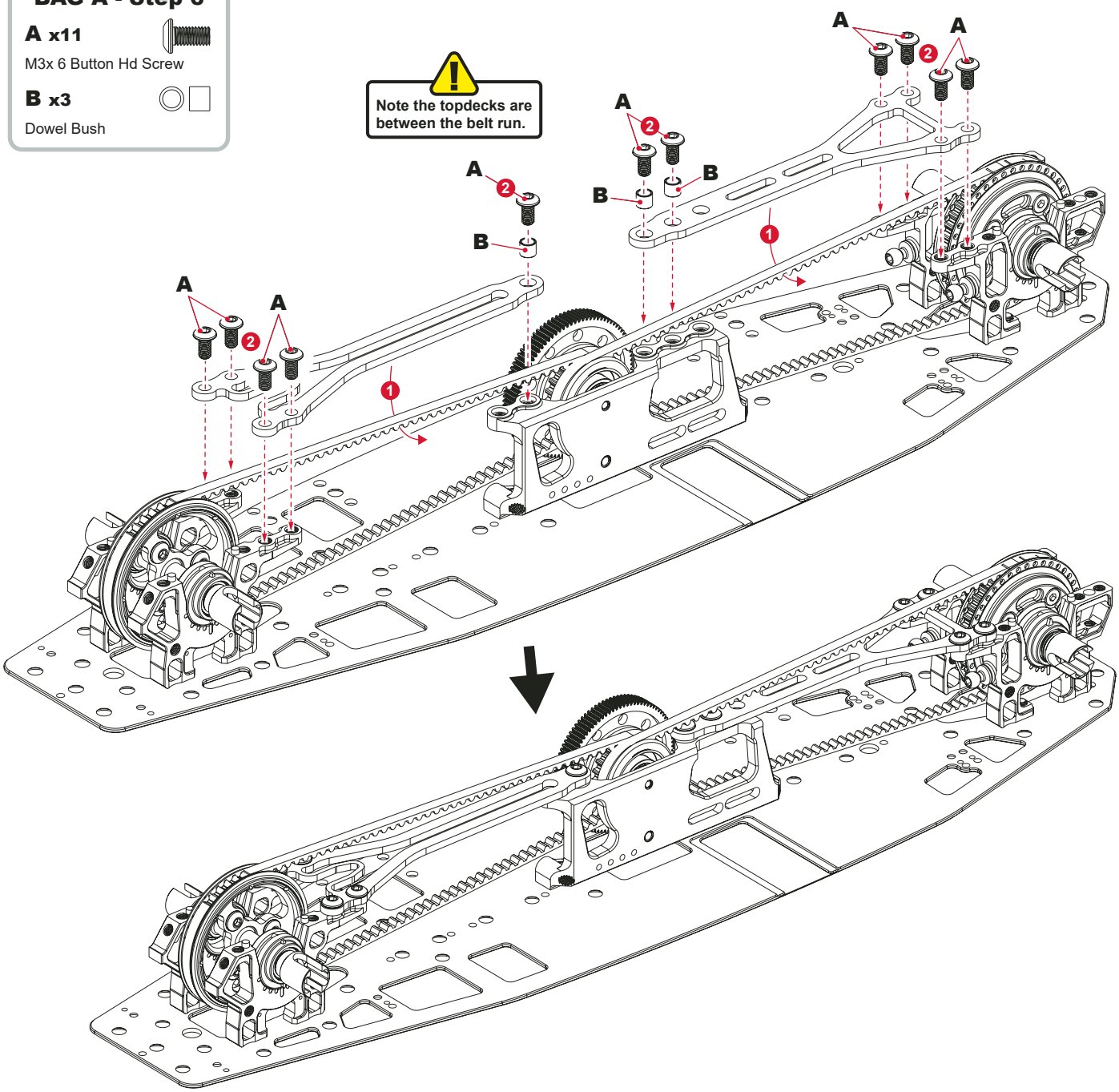

Mi10

Front & Rear Link Mount Assembly

BAG A - Step 7

A x1
M3 x 8 Cap Hd Screw

B x3
M3 Washer

C x4
Black Alloy Spacer 1.0 mm

D x8
Long Ball Stud (Low)

E x4
Black Alloy Spacer 2.0 mm

F x8
M3 Thread Insert

G x8
M3 x 6 Button Hd Screw

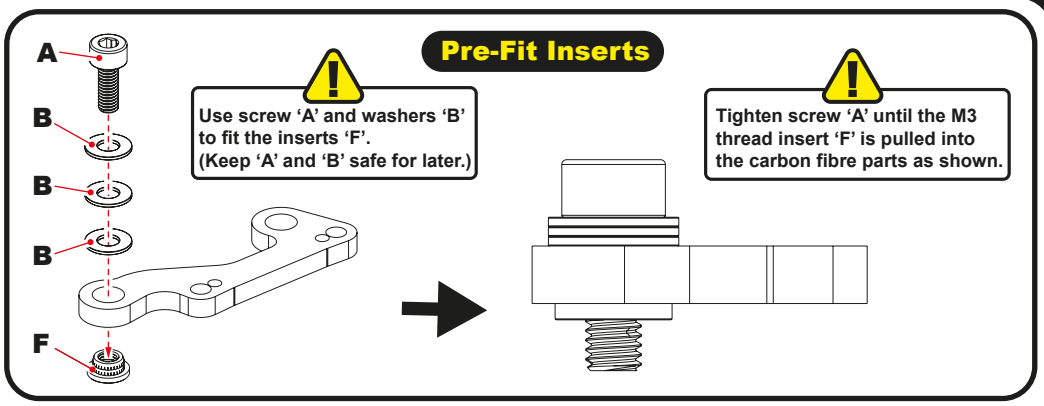

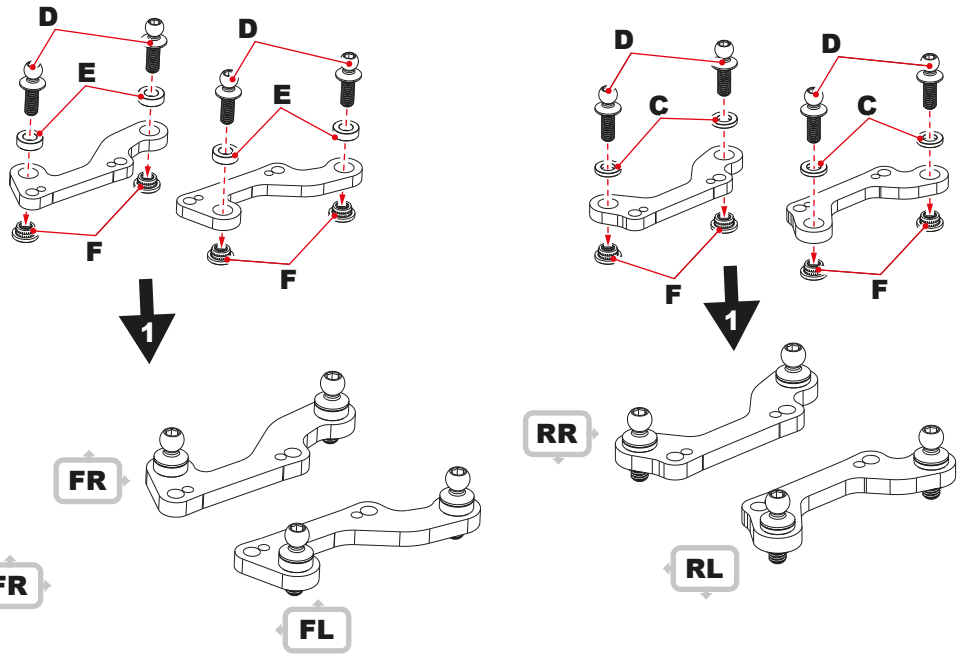

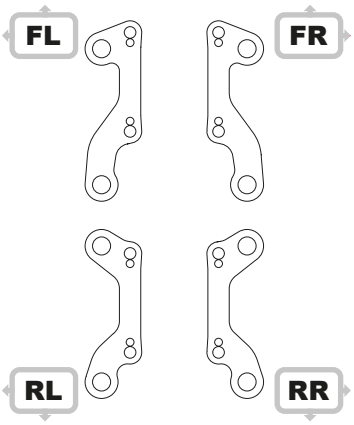

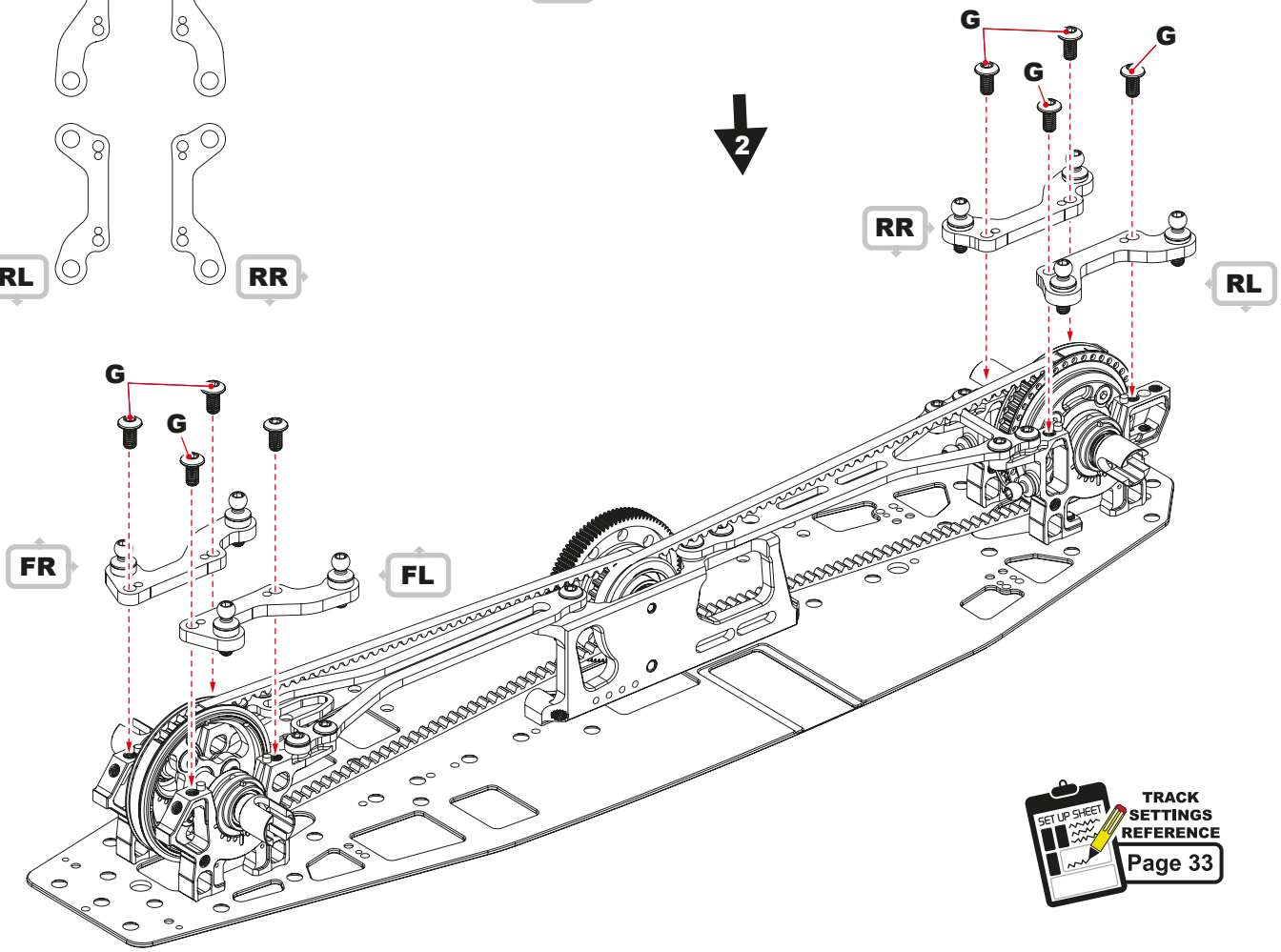

TRACK SETTINGS REFERENCE
Page 33

Front & Rear Shock Mount Assembly

BAG A - Step 8

A x4
M3x 8 Grub Screw

B x4
M3x 14 Button Hd Screw

C x4
Black Alloy Washer 3.0 mm

D x4
Grey Csk Washer 1.0 mm

E x4 S
M3x 8 Csk Hd Screw 110°

E x4 C
M3x 8 Csk Hd Screw

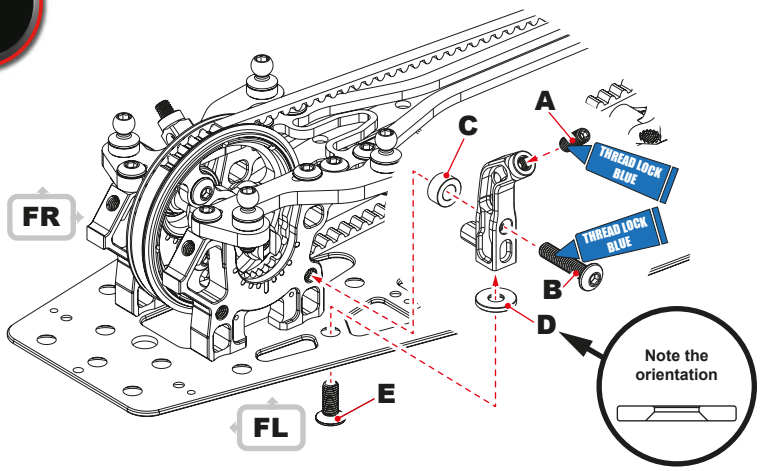

TRACK SETTINGS REFERENCE
Page 30

Build for Front Left shown.
Mirror build the Front Right.
N.B. Front diff output is hidden for clarity.

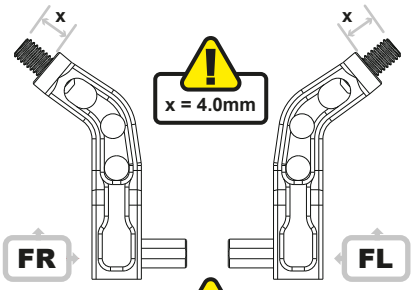

FRONT Shock Towers.
Note shape.

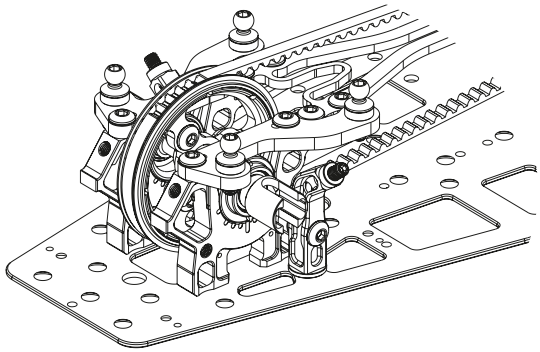

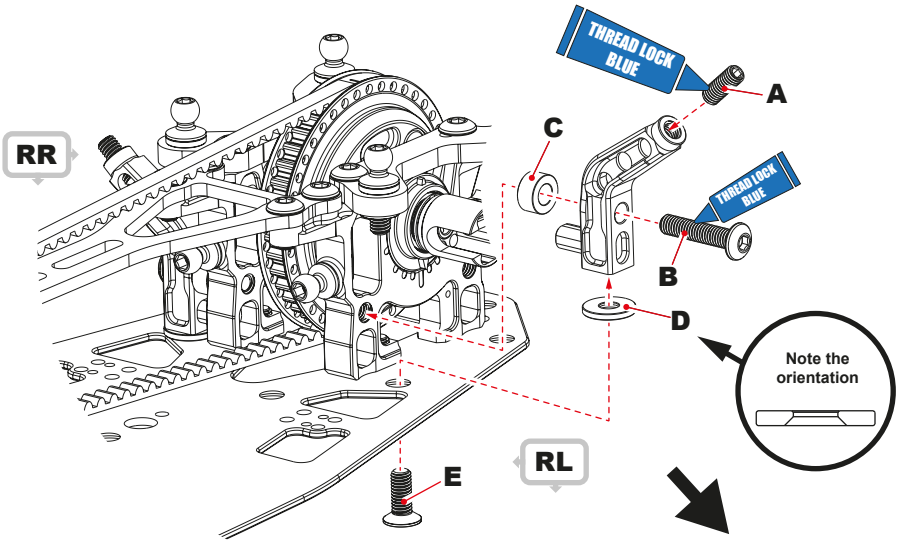

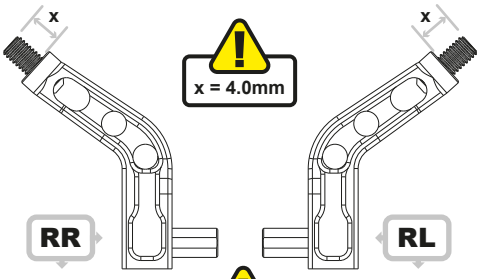

REAR Shock Towers.
Note shape.

Build for Rear Left shown.
Mirror build the Rear Right.

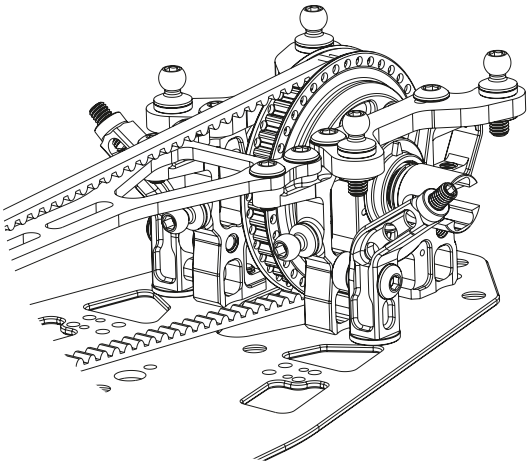

Front Lower Wishbone Assembly

BAG B - Step 9

A x2
M3 x 6 Button Hd Screw

B x2
M3x 6 Grub Screw

C x2
M3x 3 Grub Screw

D x2
M3 x 8 Patched Dome Point Grub Screw

E x6
O'ring ø5 x 1.0

F x2
M3 Black Thread Insert

G x4
5.5mm Wishbone Ball

H x2
Outer Arm Ball Stud

I x4
Grey Csk Washer 1.0 mm

J x2
Anti-Roll Bar Drop Link

K x2
M1.6x 6 Cap Head Screw

L x4 S
M3x 8 Csk Hd Screw 110°

L x4 C
M3x 8 Csk Hd Screw

M x1
M3 Nut

Pre-Fit Outer Arm Ball Stud

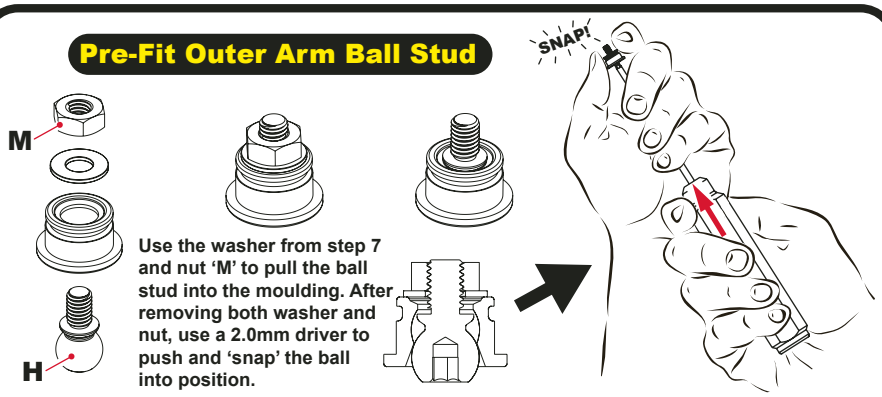

Use the washer from step 7 and nut 'M' to pull the ball stud into the moulding. After removing both washer and nut, use a 2.0mm driver to push and 'snap' the ball into position.

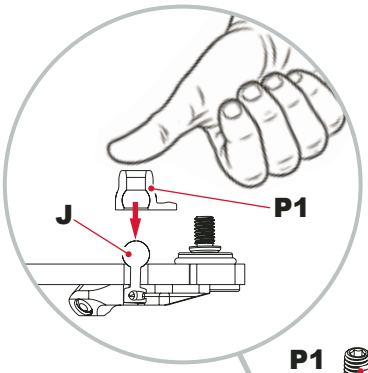

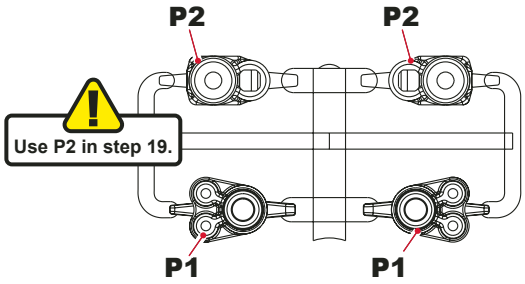

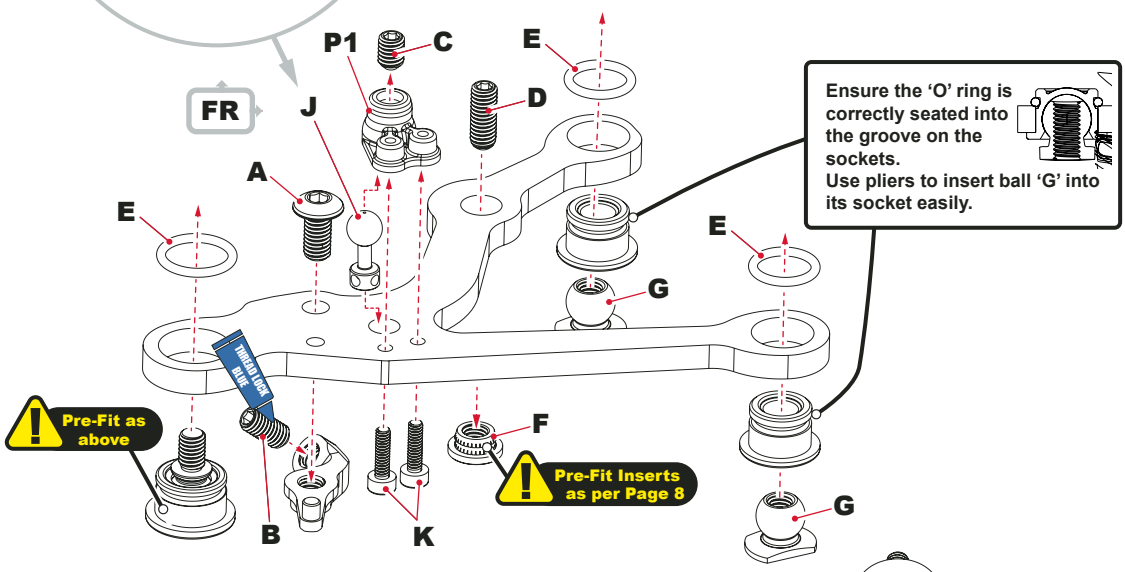

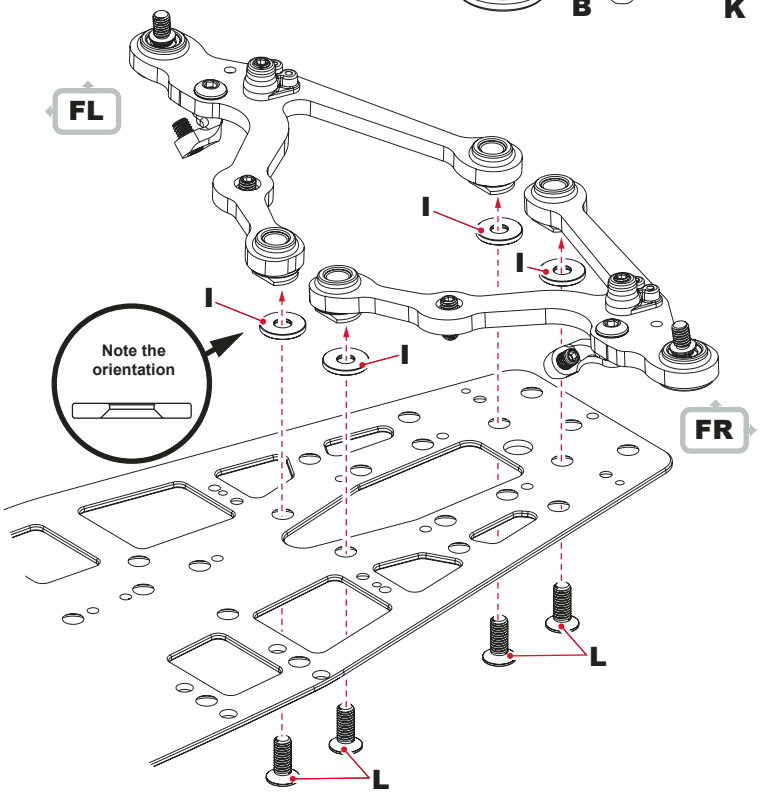

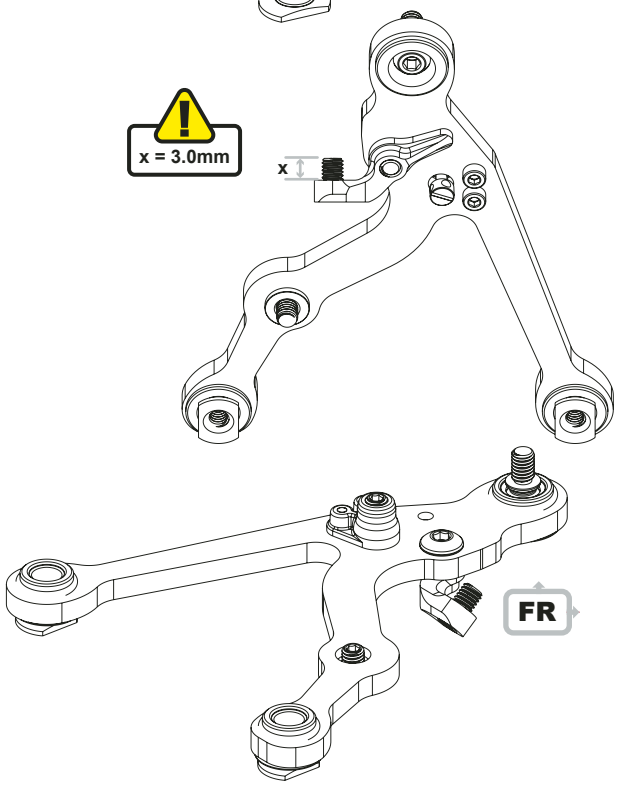

Rear Lower Wishbone Assembly

BAG B - Step 10

A x2
M3 x 6 Button Hd Screw

B x2
M3x 6 Grub Screw

C x2
M3x 3 Grub Screw

D x2
M3 x 8 Patched Dome Point Grub Screw

E x6
O'ring ø5 x 1.0

F x2
M3 Black Thread Insert

G x4
5.5mm Wishbone Ball

H x2
Outer Arm Ball Stud

I x2
Grey Csk Washer 1.0 mm

J x2
Anti-Roll Bar Drop Link

K x2
M1.6x 6 Cap Head Screw

L x4 S
M3x 8 Csk Hd Screw 110°

L x4 C
M3x 8 Csk Hd Screw

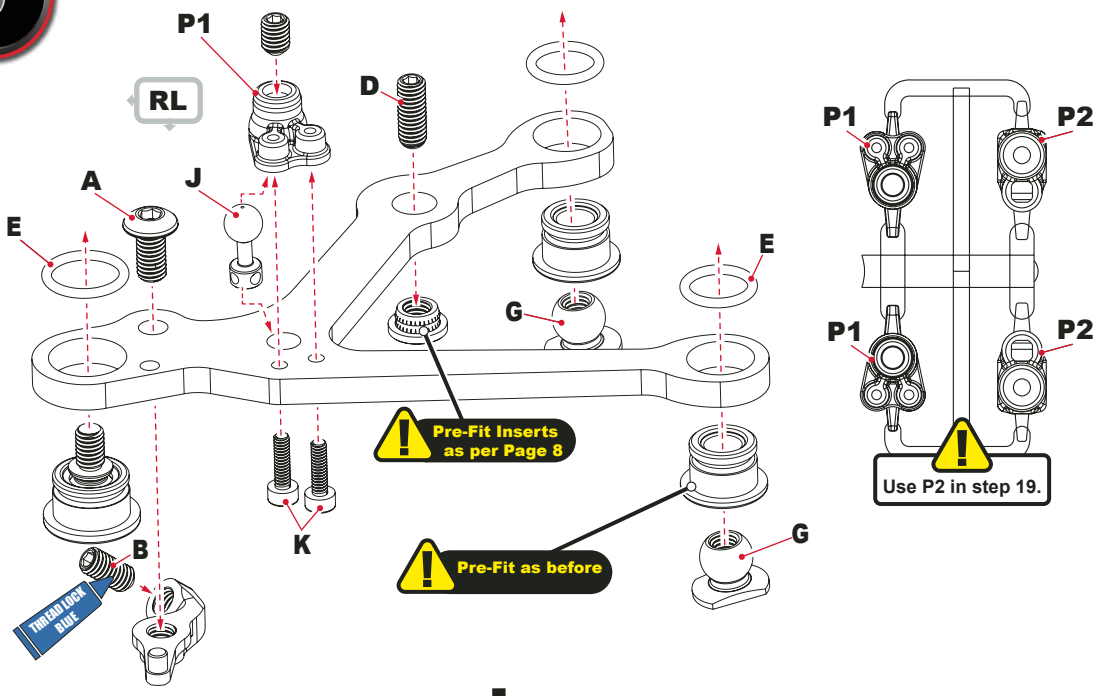

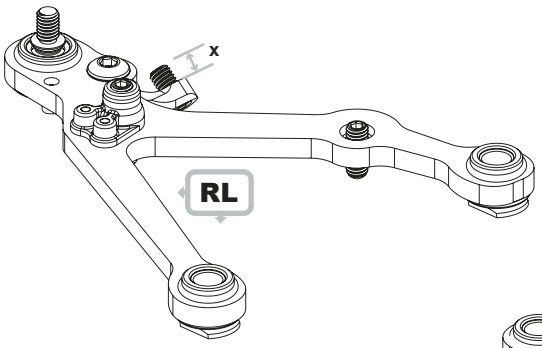

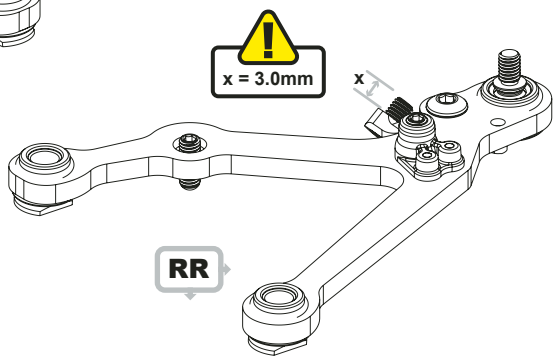

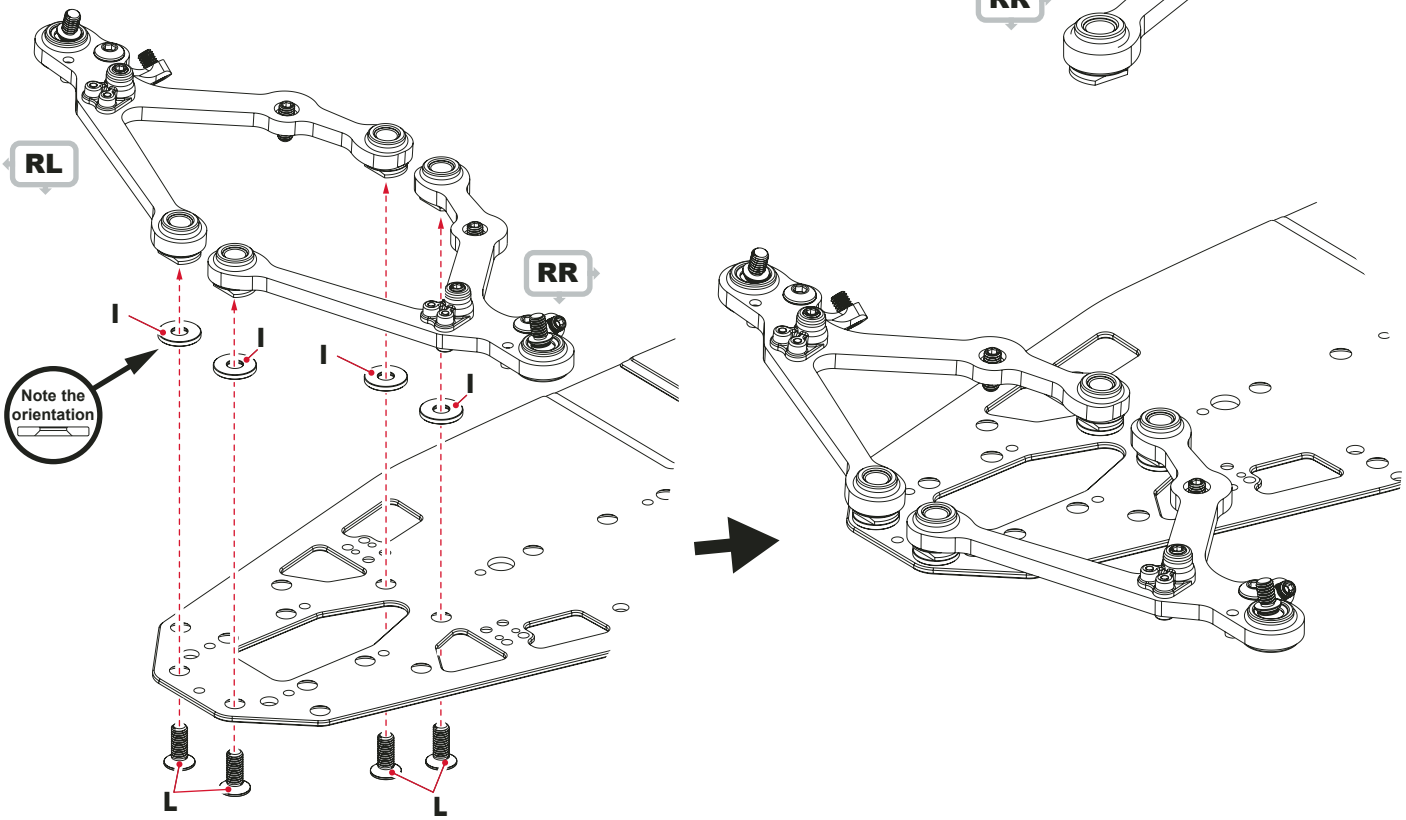

Front Driveshaft Assembly

BAG B - Step 11

A x4
Driveshaft Pin 7.3 x 1.5mm

B x4
'E' clip M1.2

C x4
Ball Bearing 1.5 x 4 x 2mm

D x2
Needle Roller 1.5 x 7.8mm

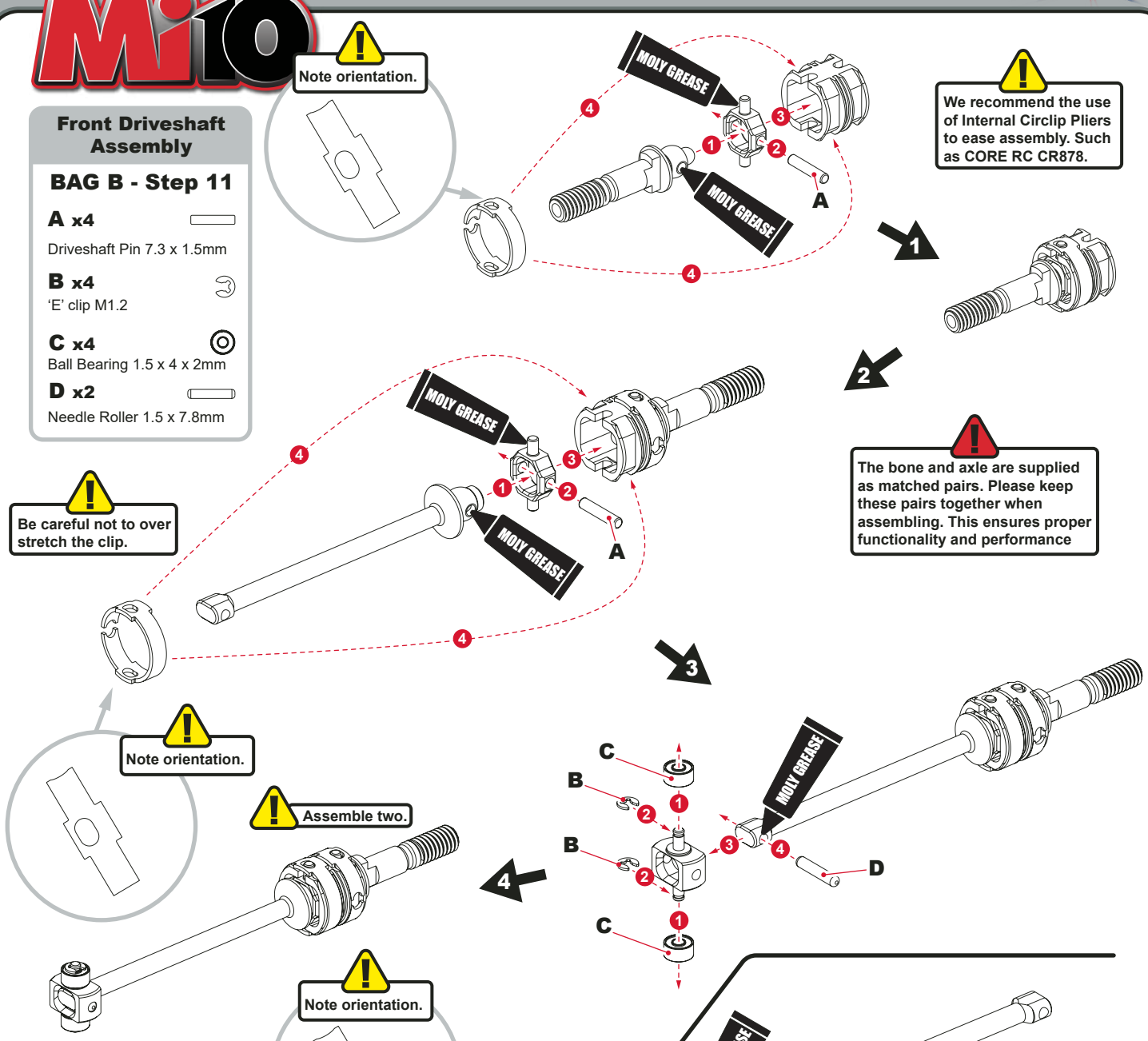

Rear Driveshaft Assembly

BAG B - Step 12

A x2
Driveshaft Pin 7.3 x 1.5mm

B x4
'E' clip M1.2

C x4
Ball Bearing 1.5 x 4 x 2mm

D x2
Needle Roller 1.5 x 7.8mm

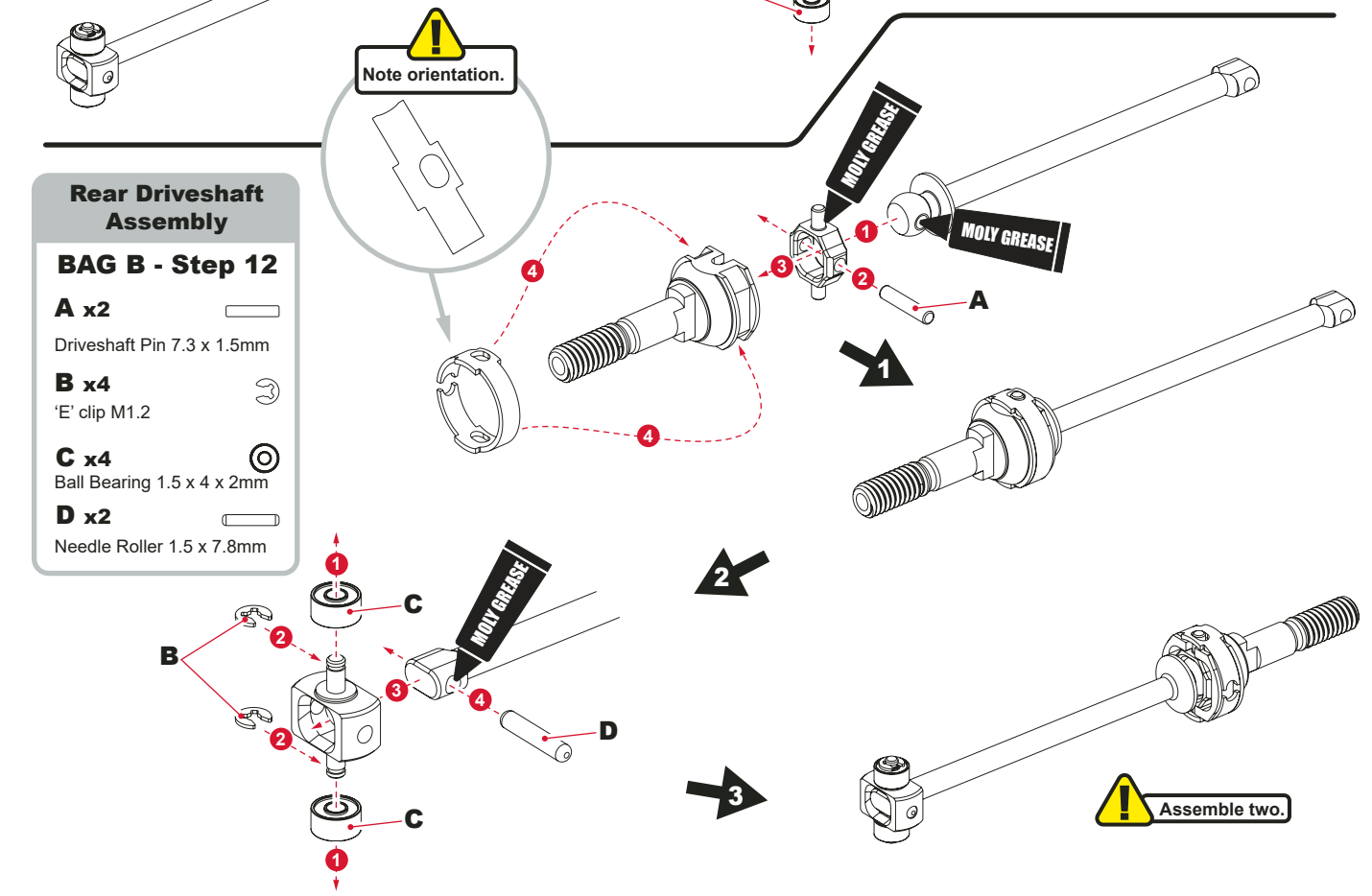

Mi10

Front Hub Assembly

BAG B - Step 13

A x6
M3 x 6 Button Hd Screw

B x2
M3 Black Thread Insert

C x2
'O' Ring ø3.5 x 1.0

D x2
Bearing ø6 x ø10 x 3.0 FI

E x2
M3 Alloy Spacer 1.0mm

F x2
M3 Alloy Spacer 0.5mm

G x2
Short Ball Stud (Low)

H x2
Hub Bearing Spacer

I x4
M3 x 8 Button Hd Screw

J x2
Bearing ø6 x ø10 x 3.0 FI Pro

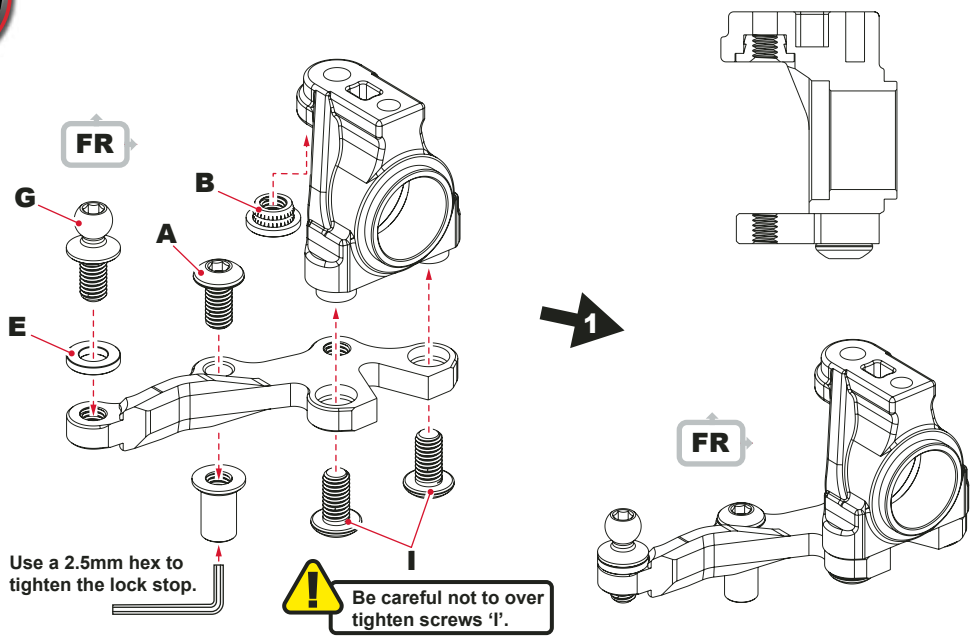

Use a 2.5mm hex to tighten the lock stop.

Be careful not to over tighten screws 'I'.

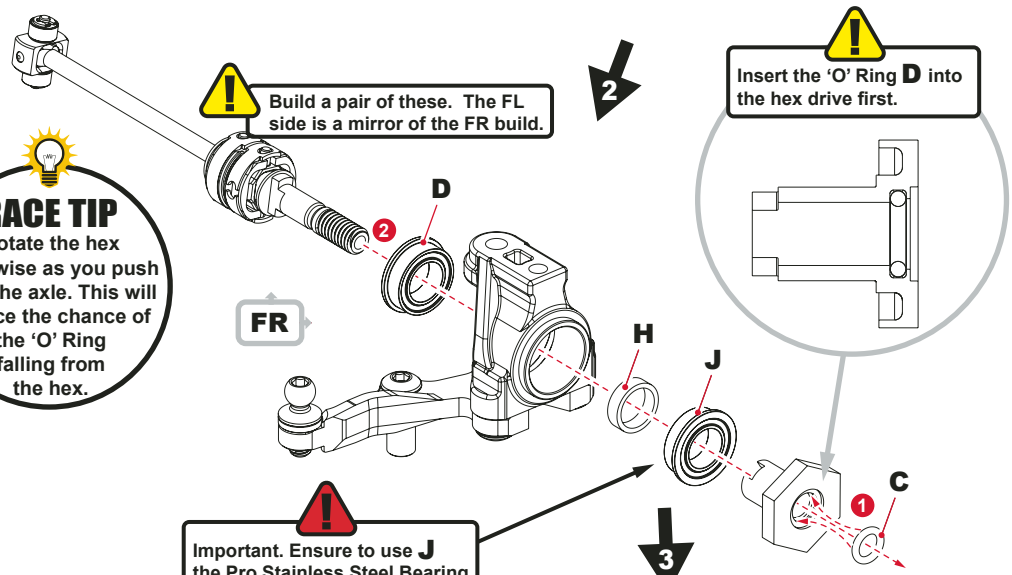

Build a pair of these. The FL side is a mirror of the FR build.

Insert the 'O' Ring **D** into the hex drive first.

RACE TIP
Rotate the hex clockwise as you push it on the axle. This will reduce the chance of the 'O' Ring falling from the hex.

Important. Ensure to use **J** the Pro Stainless Steel Bearing (U9137) for the outer bearing.

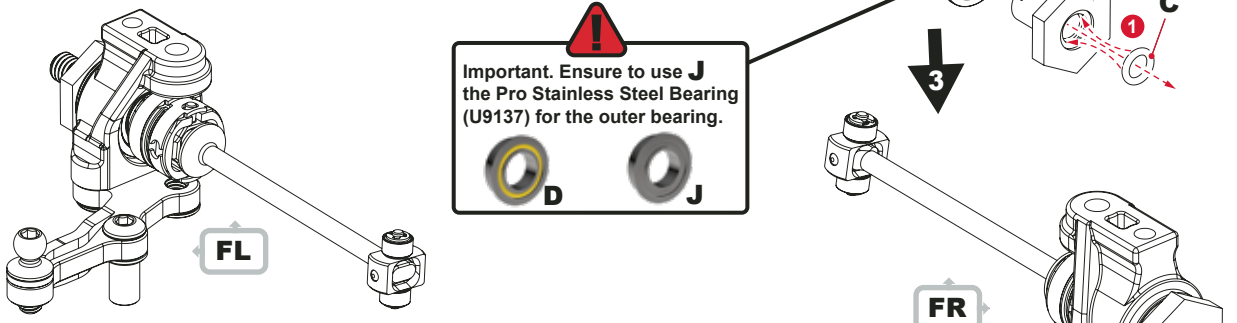

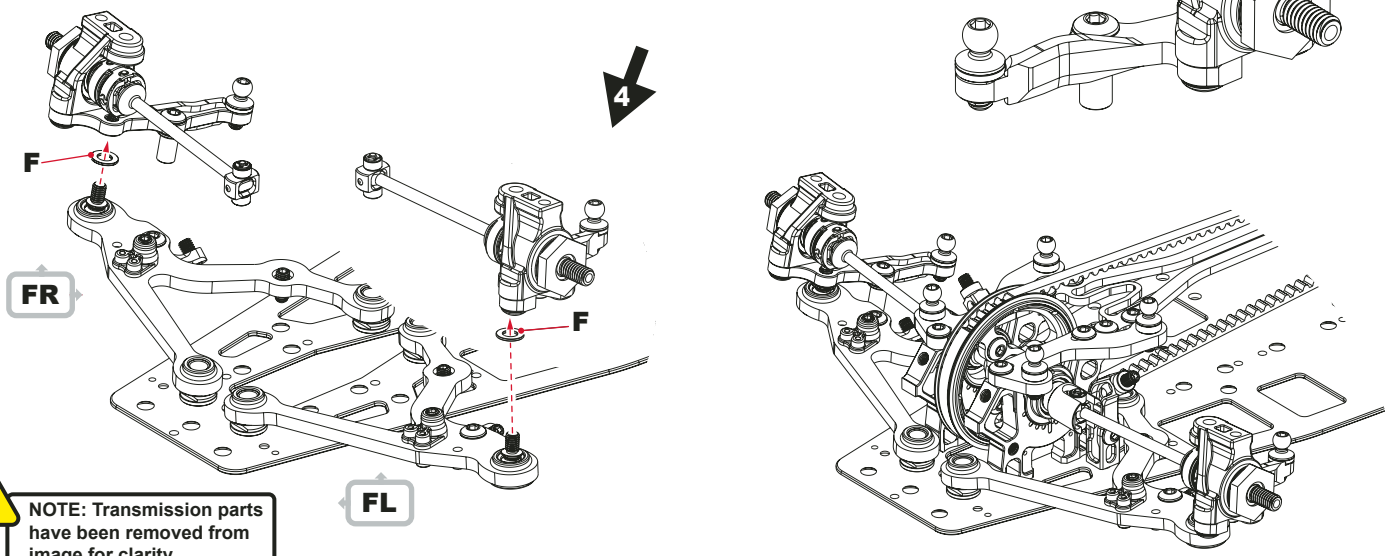

NOTE: Transmission parts have been removed from image for clarity.

Mi10

Rear Hub Assembly

BAG B - Step 14

A x8
M3 x 8 Button Hd Screw

B x2
M3 Black Thread Insert

C x2
'O' Ring ø3.5 x 1.0

D x2
Bearing ø6 x ø10 x 3.0 FI

E x2
M3 Alloy Spacer 1.0mm

F x2
M3 Alloy Spacer 2.0mm

G x2
Short Ball Stud (Low)

H x2
Hub Bearing Spacer

I x2
Bearing ø6 x ø10 x 3.0 FI Pro

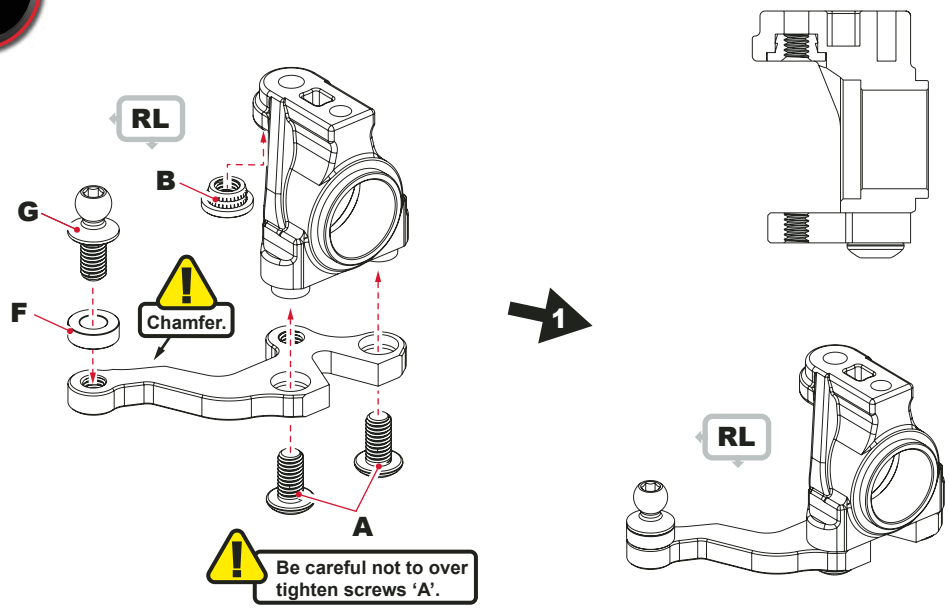

Be careful not to over tighten screws 'A'.

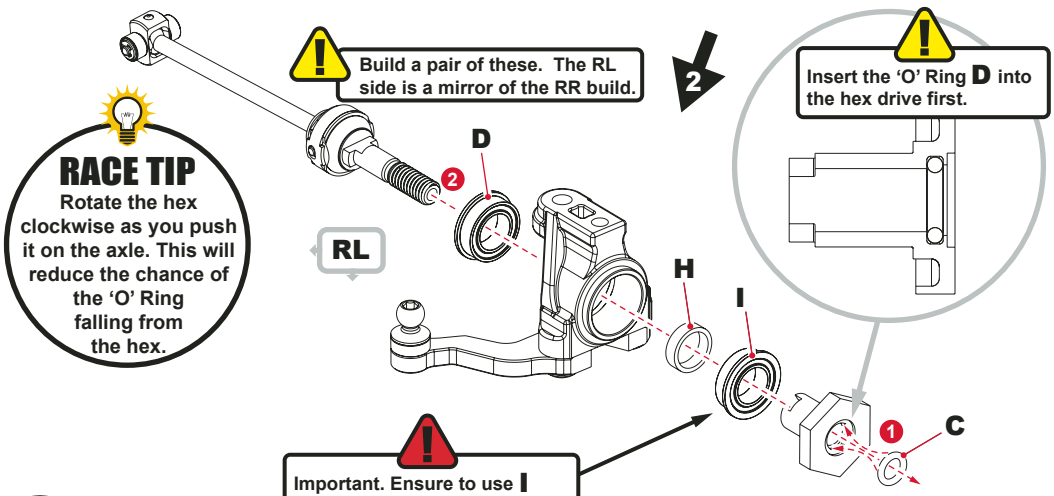

Build a pair of these. The RL side is a mirror of the RR build.

Insert the 'O' Ring **D** into the hex drive first.

RACE TIP
Rotate the hex clockwise as you push it on the axle. This will reduce the chance of the 'O' Ring falling from the hex.

Important. Ensure to use the Pro Stainless Steel Bearing (U9137) for the outer bearing.

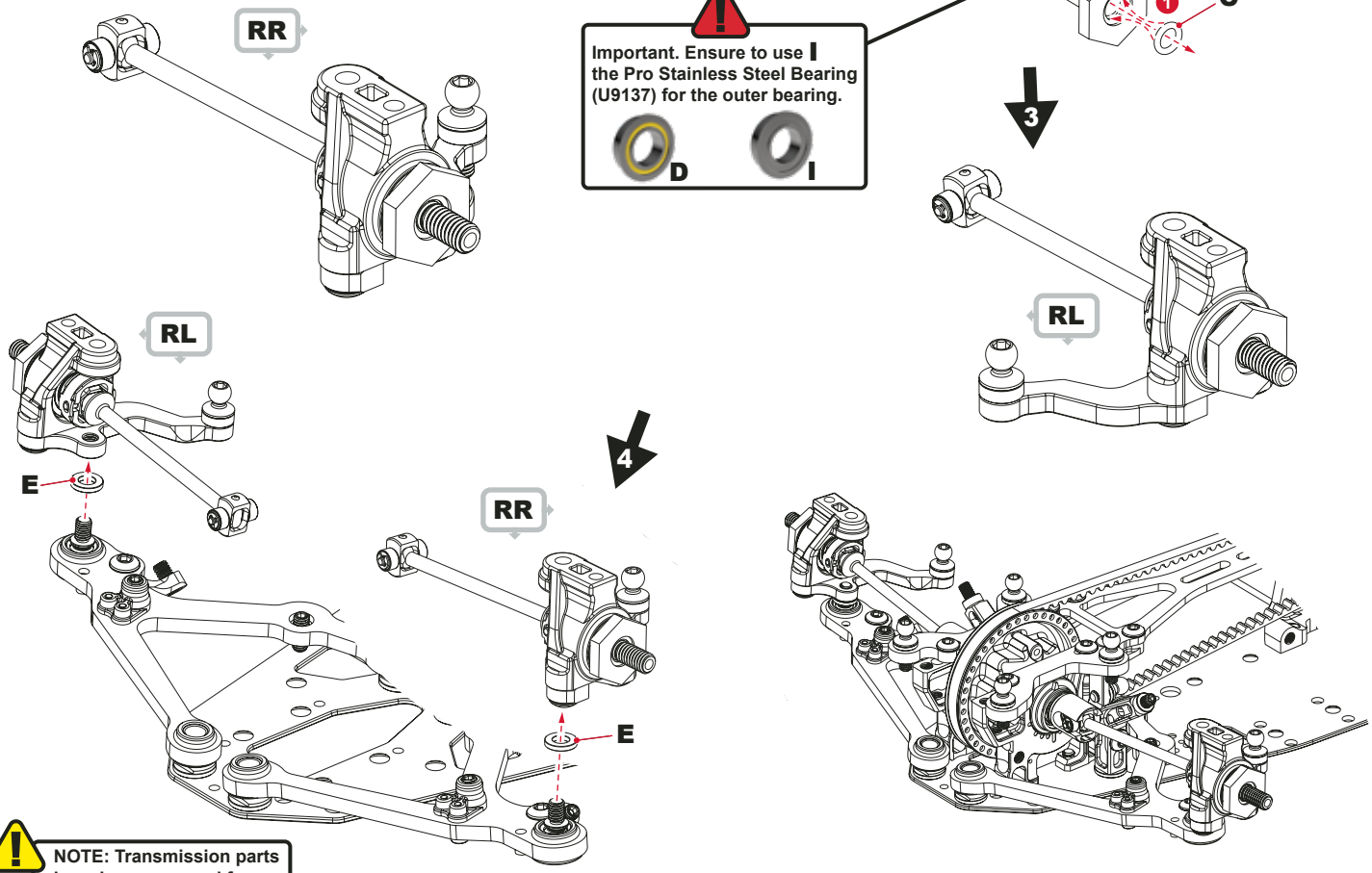

NOTE: Transmission parts have been removed from image for clarity.

Rear Upper Wishbone Assembly

BAG B - Step 15

A x2
Alloy Upper Link Pivot (Rear)

B x2
M3 Alloy Spacer 1.0mm

C x2
Short Ball Stud

Note the shape of the turnbuckle.
This groove indicates the left hand thread.

LH Thread — RH Thread

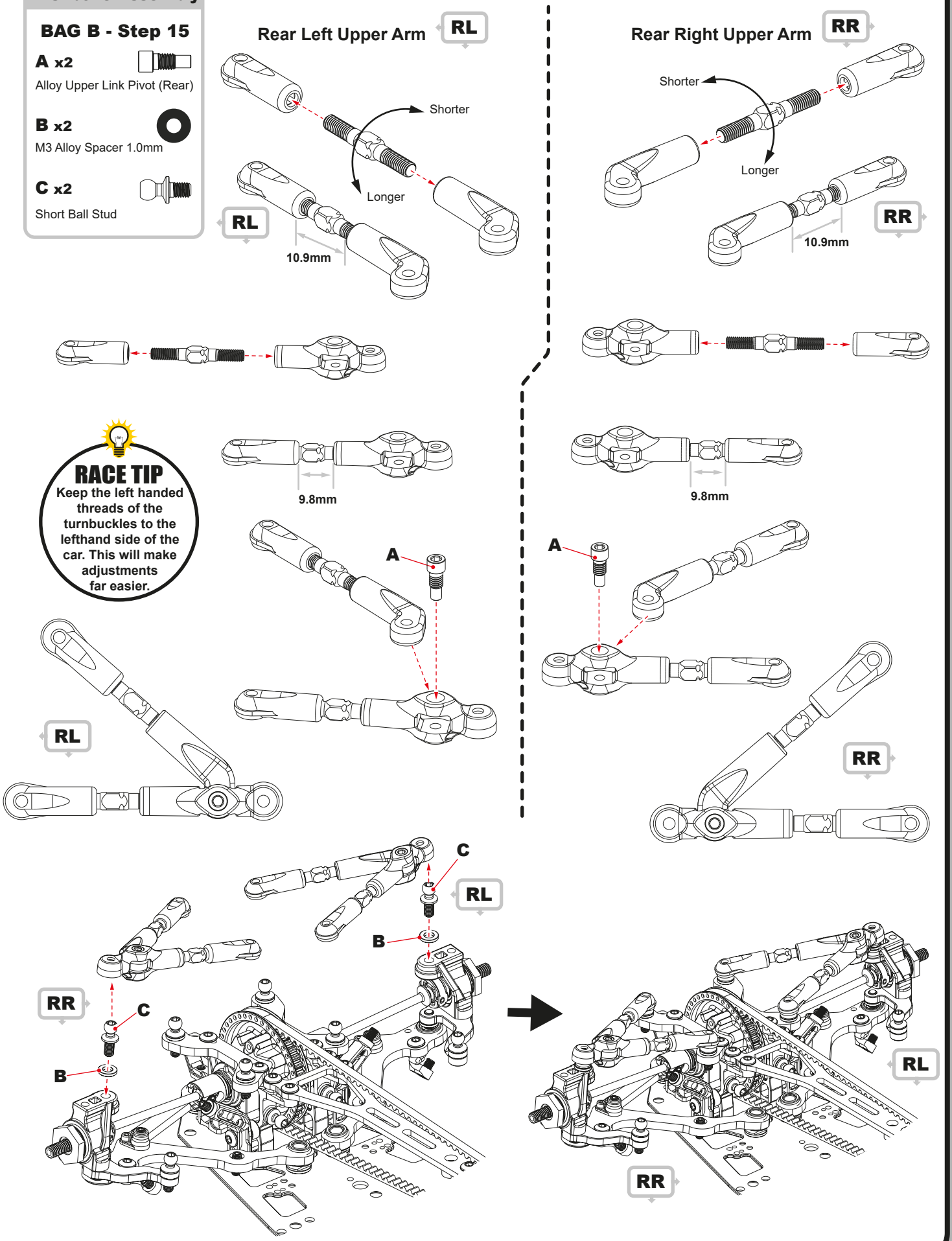

RACE TIP
Keep the left handed threads of the turnbuckles to the lefthand side of the car. This will make adjustments far easier.

Mi10

Front Upper Wishbone Assembly

BAG B - Step 15

A x2
Alloy Upper Link Pivot (Front)

B x2
M3 Alloy Spacer 1.0mm

C x2
Short Ball Stud

Note the shape of the turnbuckle.
This groove indicates the left hand thread.

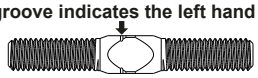

Front Left Upper Arm FL

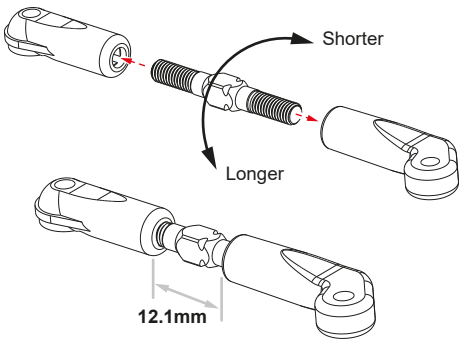

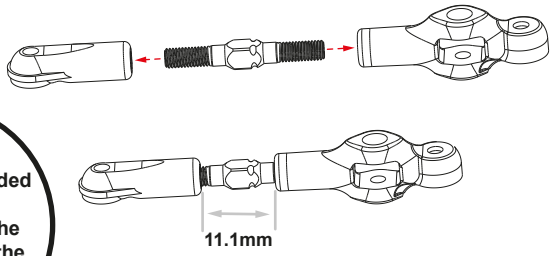

Front Right Upper Arm FR

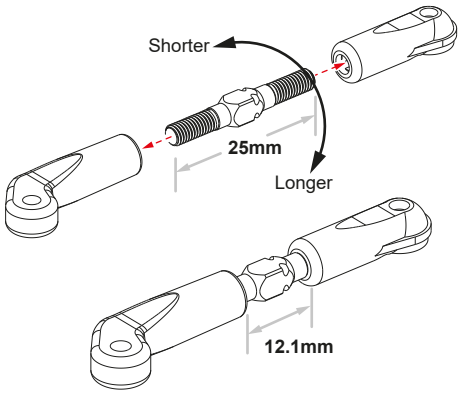

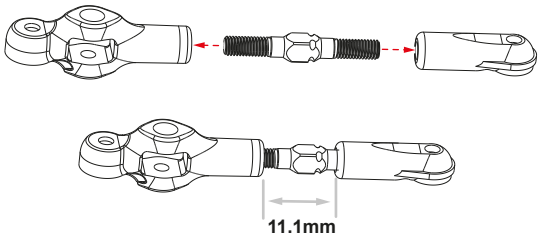

RACE TIP
Keep the left handed threads of the turnbuckles to the lefthand side of the car. This will make adjustments far easier.

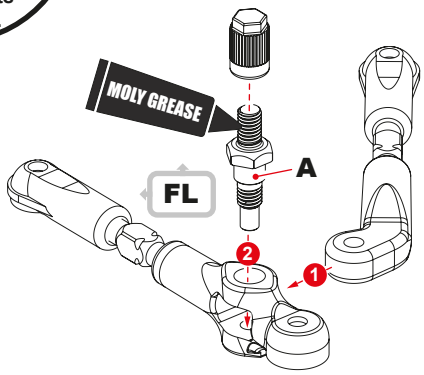

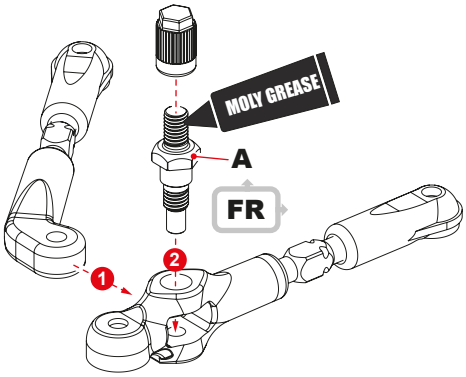

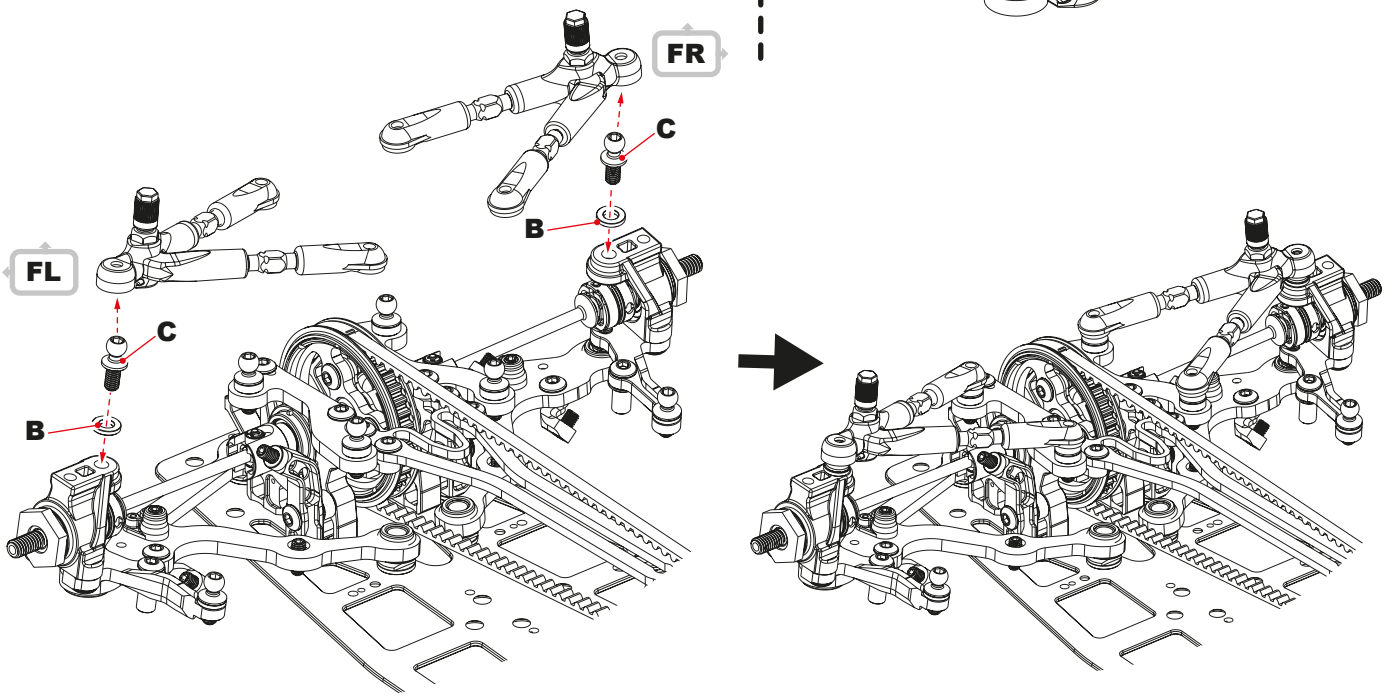

Mi10

Centre Track Rod Assembly

BAG B - Step 16

A x2
M3 x 8 Button Hd Screw

B x2
Washer ø3.0 x ø4.5 x 0.25

C x2
M3 x 6 Grub Screw

D x1
Ball Stud Ultra Short

E x2
Ball Stud Short

F x2
M3 x 4 Button Hd Screw

G x2
Spacer ø4 x ø5.65 x 1

H x4
Bearing ø4 x ø8 x 3

I x2
M3 Alloy Spacer 1.0mm

J x2 S
M3x 5 Csk Hd Screw 110°

J x2 C
M3x 6 Csk Hd Screw

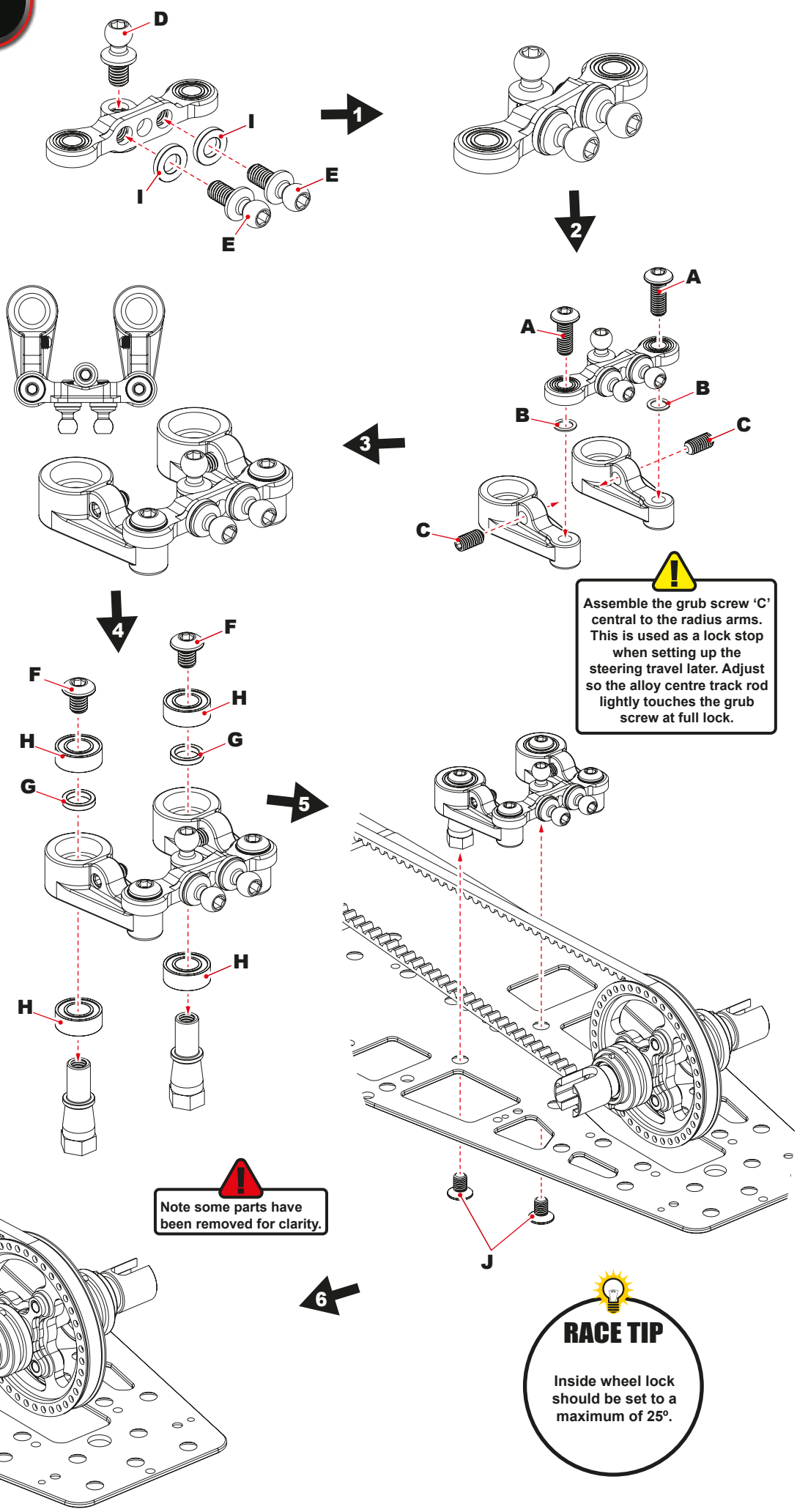

Assemble the grub screw 'C' central to the radius arms. This is used as a lock stop when setting up the steering travel later. Adjust so the alloy centre track rod lightly touches the grub screw at full lock.

Note some parts have been removed for clarity.

RACE TIP

Inside wheel lock should be set to a maximum of 25º.

Mi10

Turnbuckle Assembly

BAG C - Step 17

Turnbuckle Lengths (mm)	x	y
Front (FL&FR)	**28.3**	**45**
Rear (RL&RR)	**17.7**	**35**

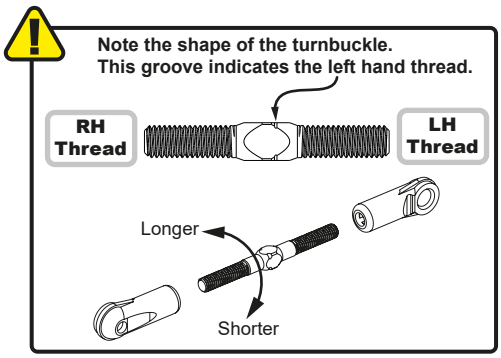

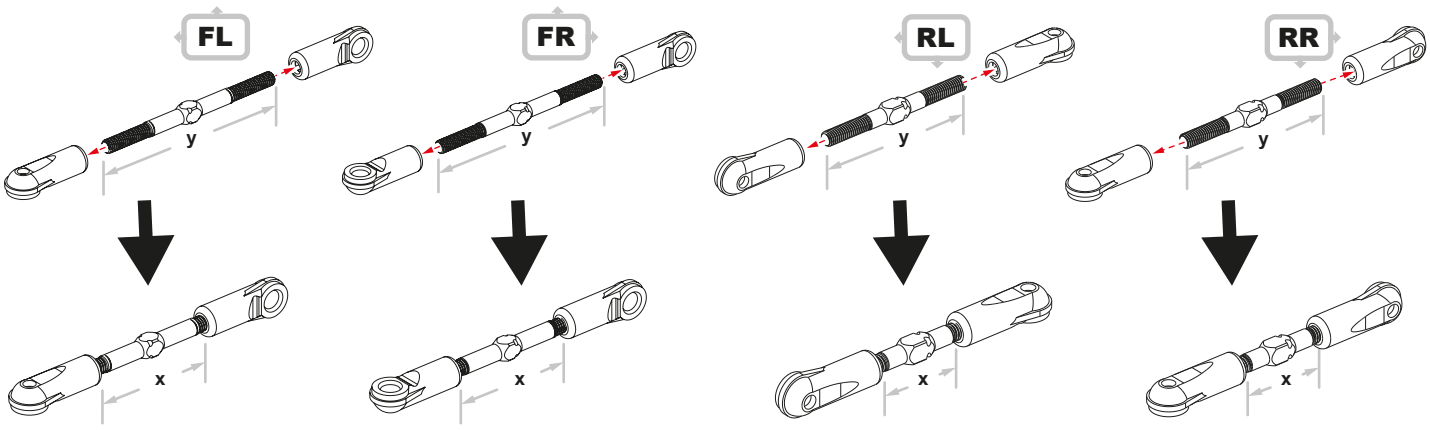

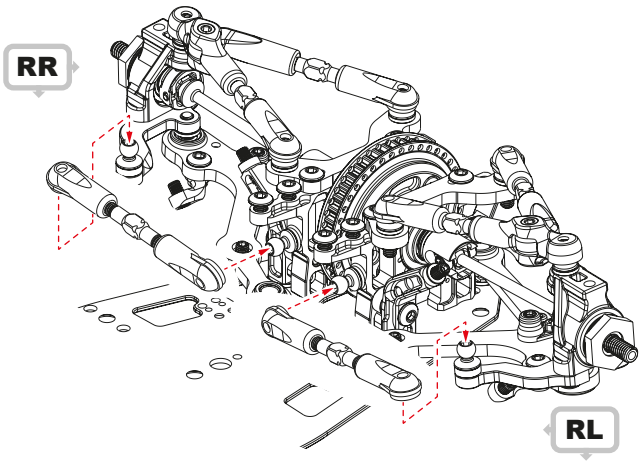

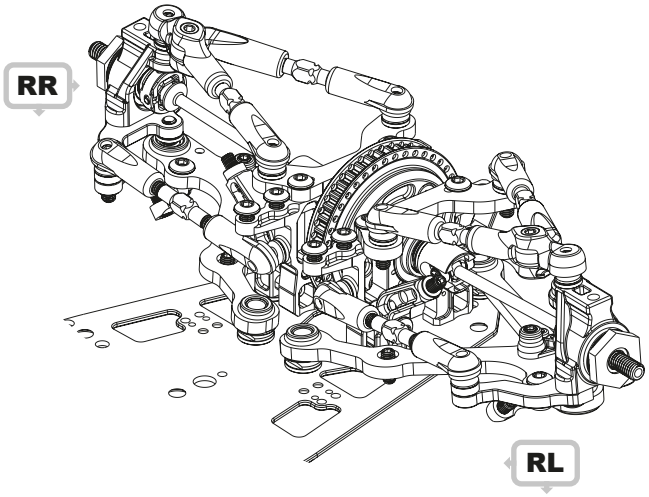

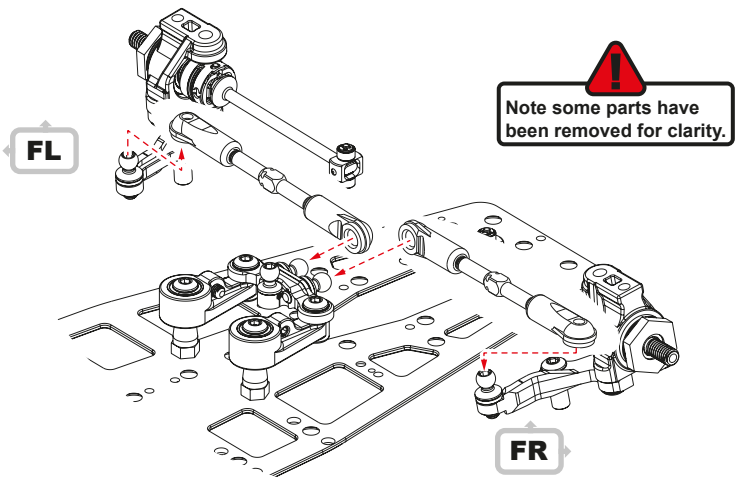

Note some parts have been removed for clarity.

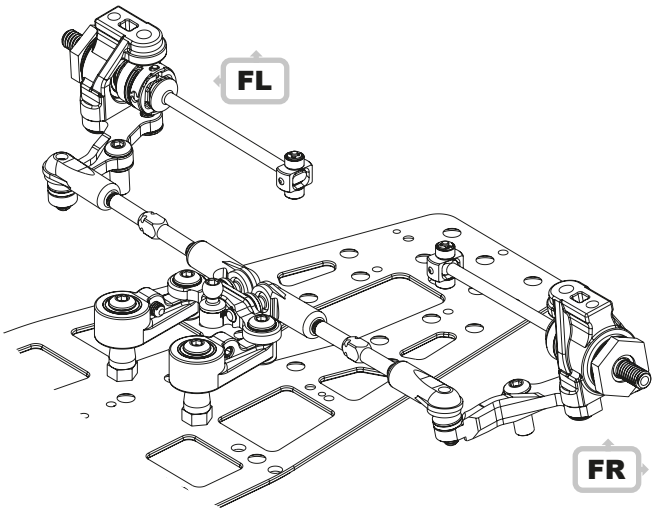

Steering Servo Installation

BAG C - Step 18

A x1
M3 x 8 Button Hd

B x1
Ball Stud Short

C x1
M3 Nut

D x3
M3 x 8 Csk Screw

E x3
M3 Black Alloy C/S Washer

F x2 S
M3x 5 Csk Hd Screw 110°

F x2 C
M3x 6 Csk Hd Screw

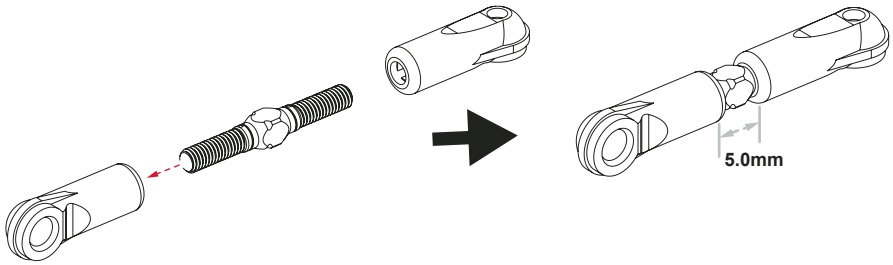

Important: Select the correct horn for your brand of servo.

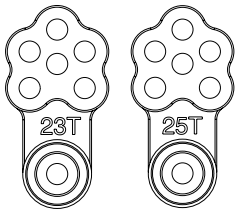

Sanwa
KO

Futaba
Core RC
Highest
Power HD
Savox

The servo horn should be at approximately 15° when steering is central.

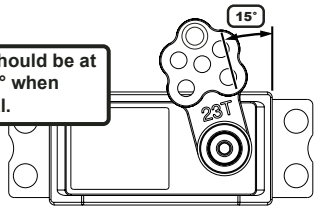

Before you assemble the servo horn, connect up your radio gear and set the steering servo to neutral.

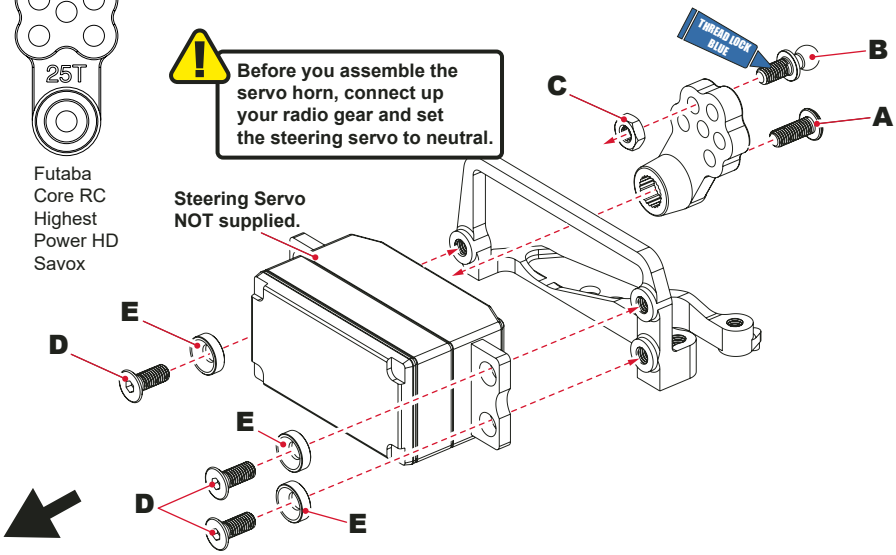

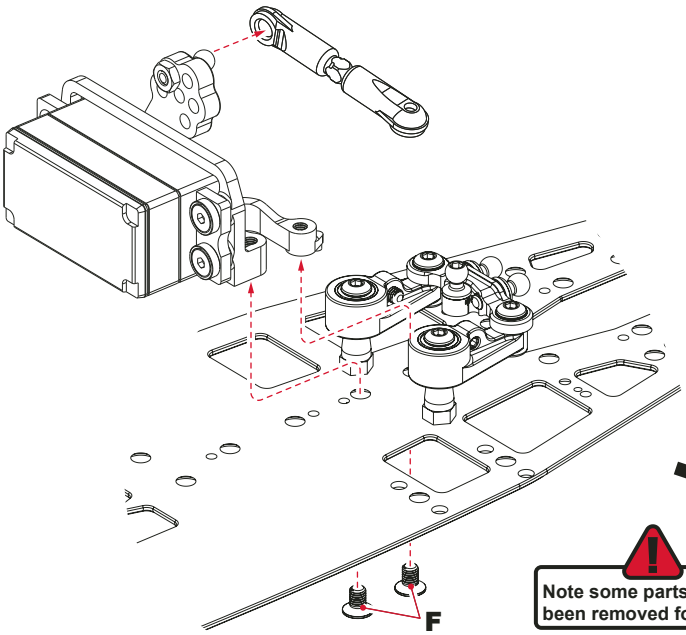

The dowel pins on the servo mount may protrude 0.3mm through the chassis. You may remove any excess with a file if required.

Note some parts have been removed for clarity.

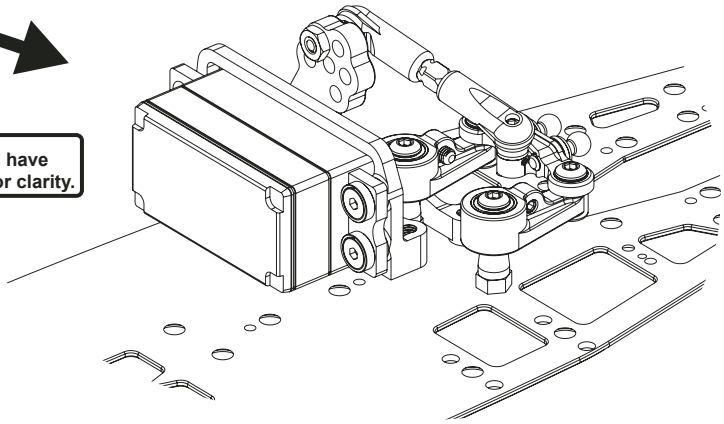

Mi10

Rear Anti-Roll Bar Fitting

BAG C - Step 19

A x2
M3 x 3 Cup Grub Screw

B x2
M3 x 4 Cone Grub Screw

C x2
M2x 8 Csk Hd Screw

D x2
M2x 5 Csk Hd Screw

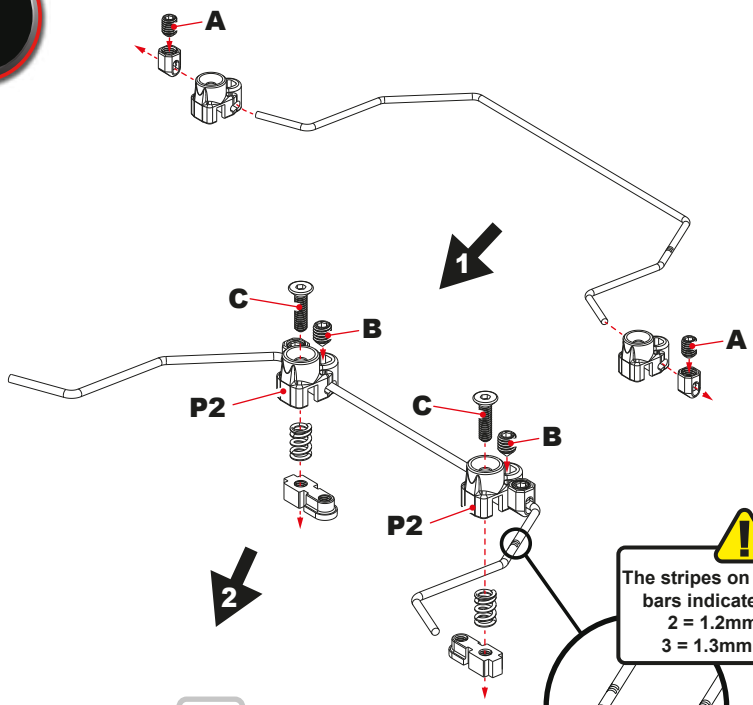

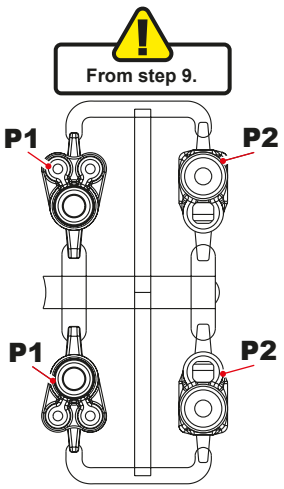

The stripes on the anti-roll bars indicate the size.
2 = 1.2mm (rear)
3 = 1.3mm (front)

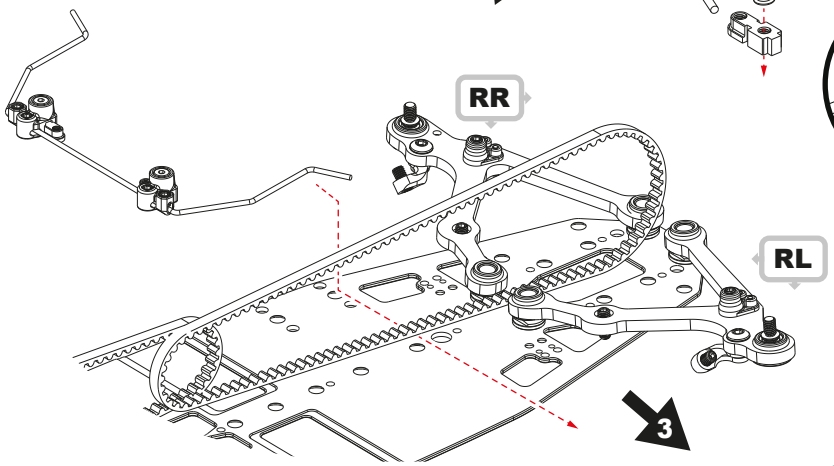

Align the 1.2mm anti roll bar with the line on the drop link.

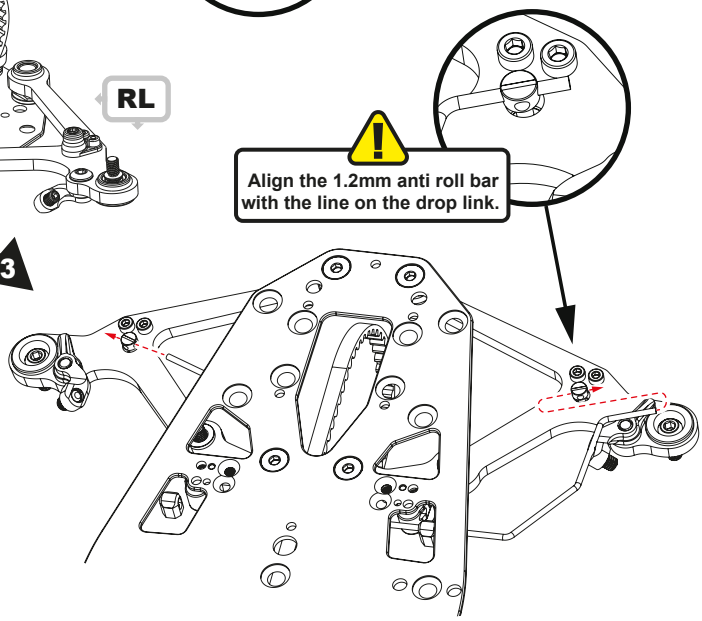

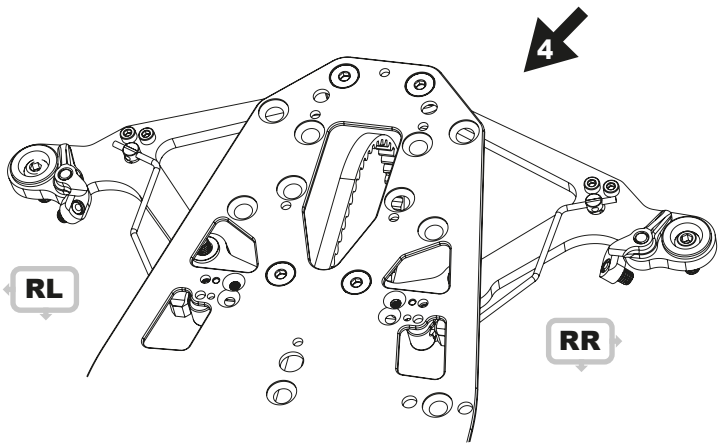

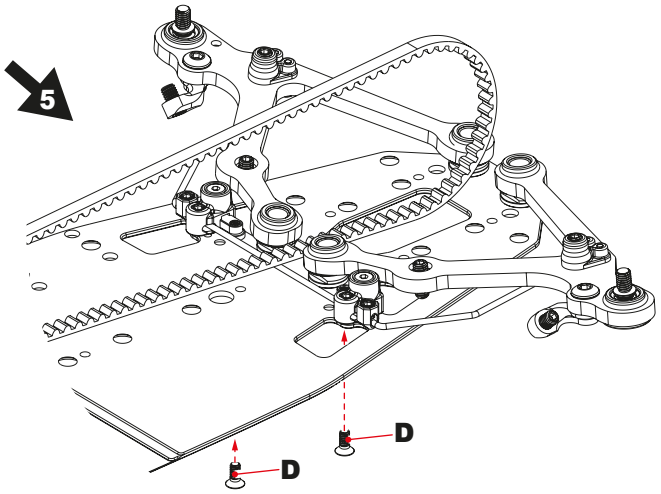

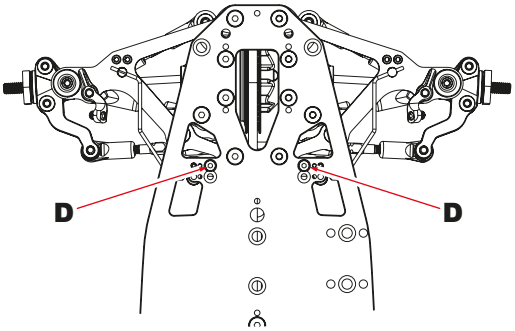

Mi10

Front Anti-Roll Bar Fitting

BAG C - Step 19

A x2
M3 x 3 Cup Grub Screw

B x2
M3 x 4 Cone Grub Screw

C x2
M2x 8 Csk Hd Screw

D x2
M2x 5 Csk Hd Screw

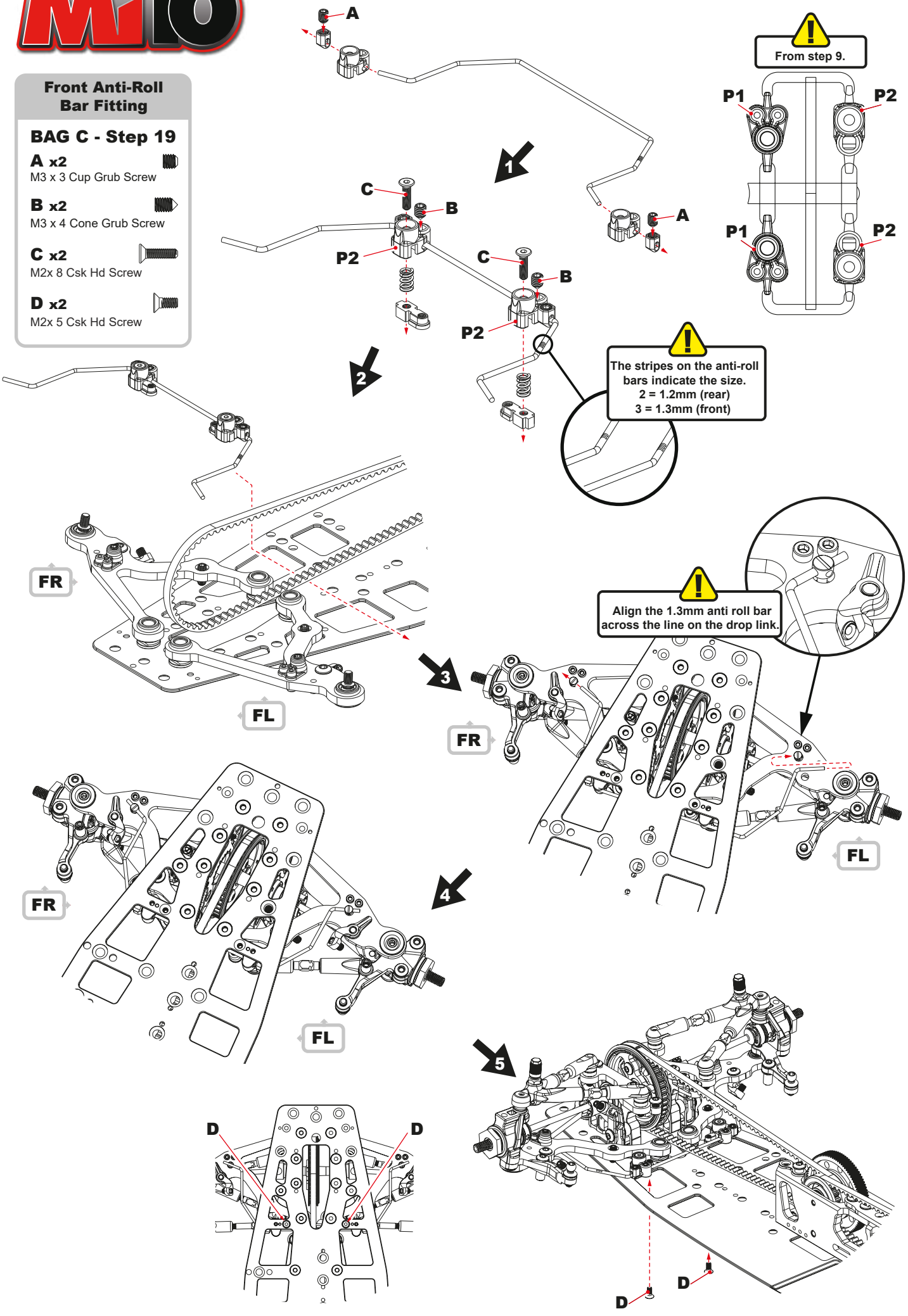

Anti-Roll Bar Fitting

BAG C - Step 19
Set up details

Tighten the ARB collars so that the wire is central about the car.

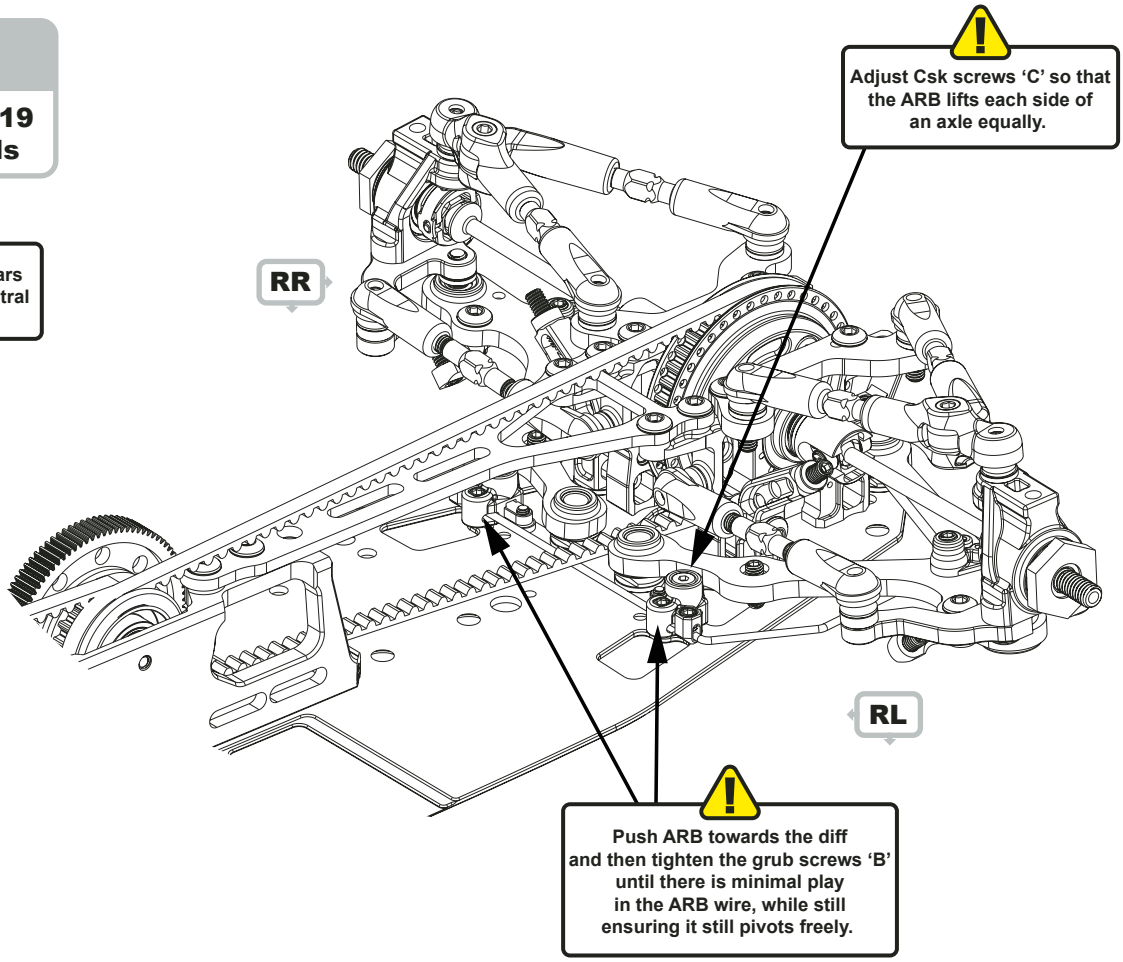

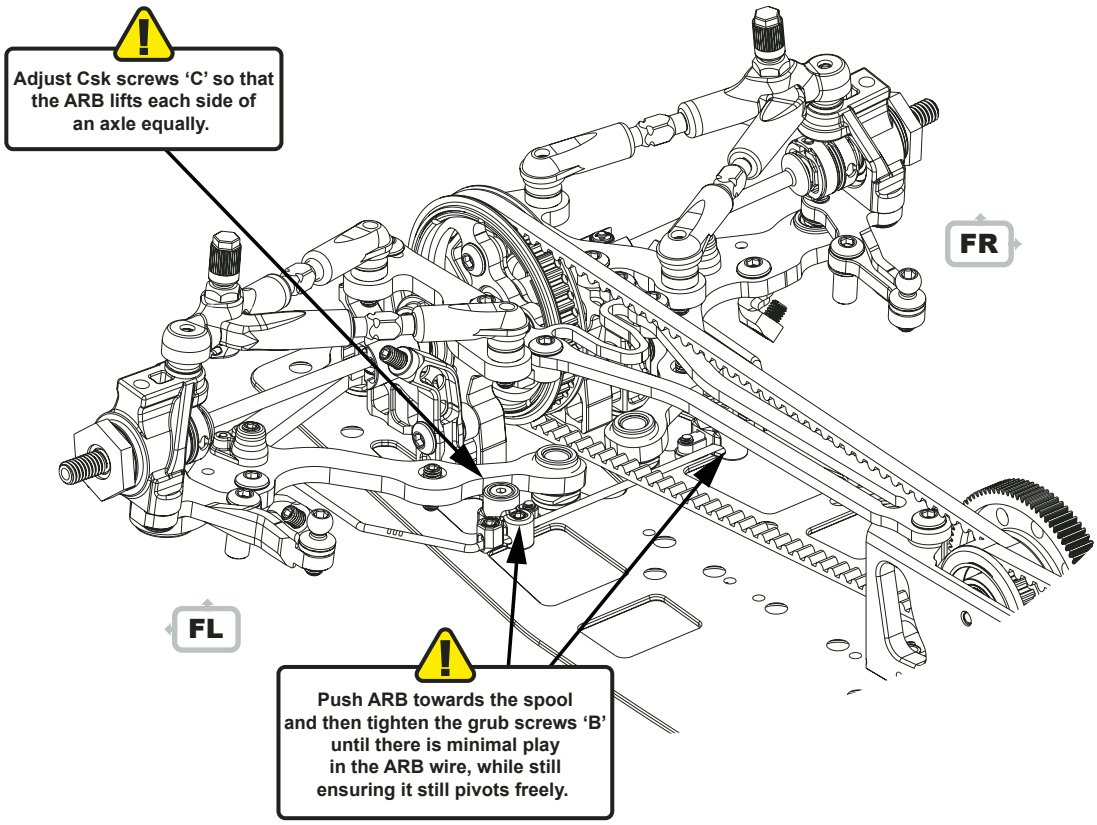

Shock Absorber Assembly

BAG C - Step 20

A x8
Shim 0.05

B x4
M2 x 6 Csk Screw

C x4
Red 'O' Ring

D x4
'O'ring ø13 x 1.0

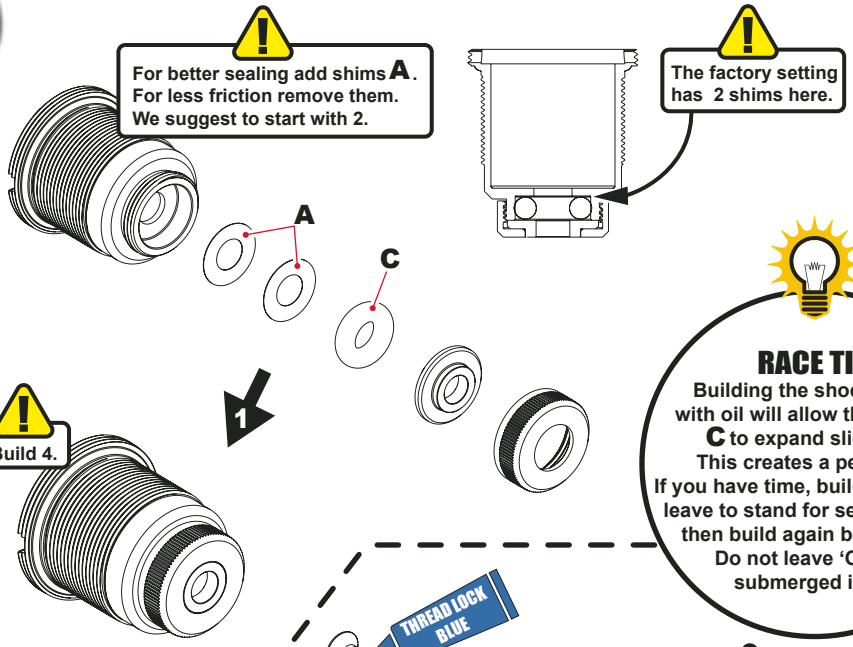

RACE TIP
Building the shocks, filled with oil will allow the 'O' rings **C** to expand slightly.
This creates a perfect fit.
If you have time, build the shocks, leave to stand for several hours, then build again before use.
Do not leave 'O' rings submerged in oil.

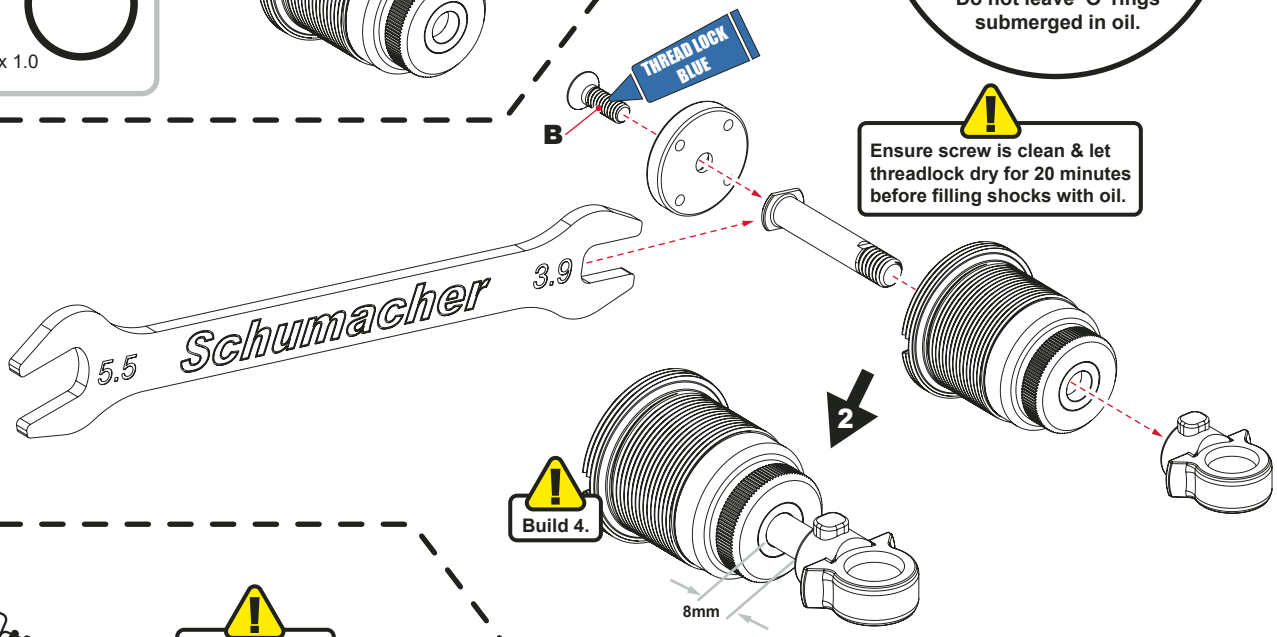

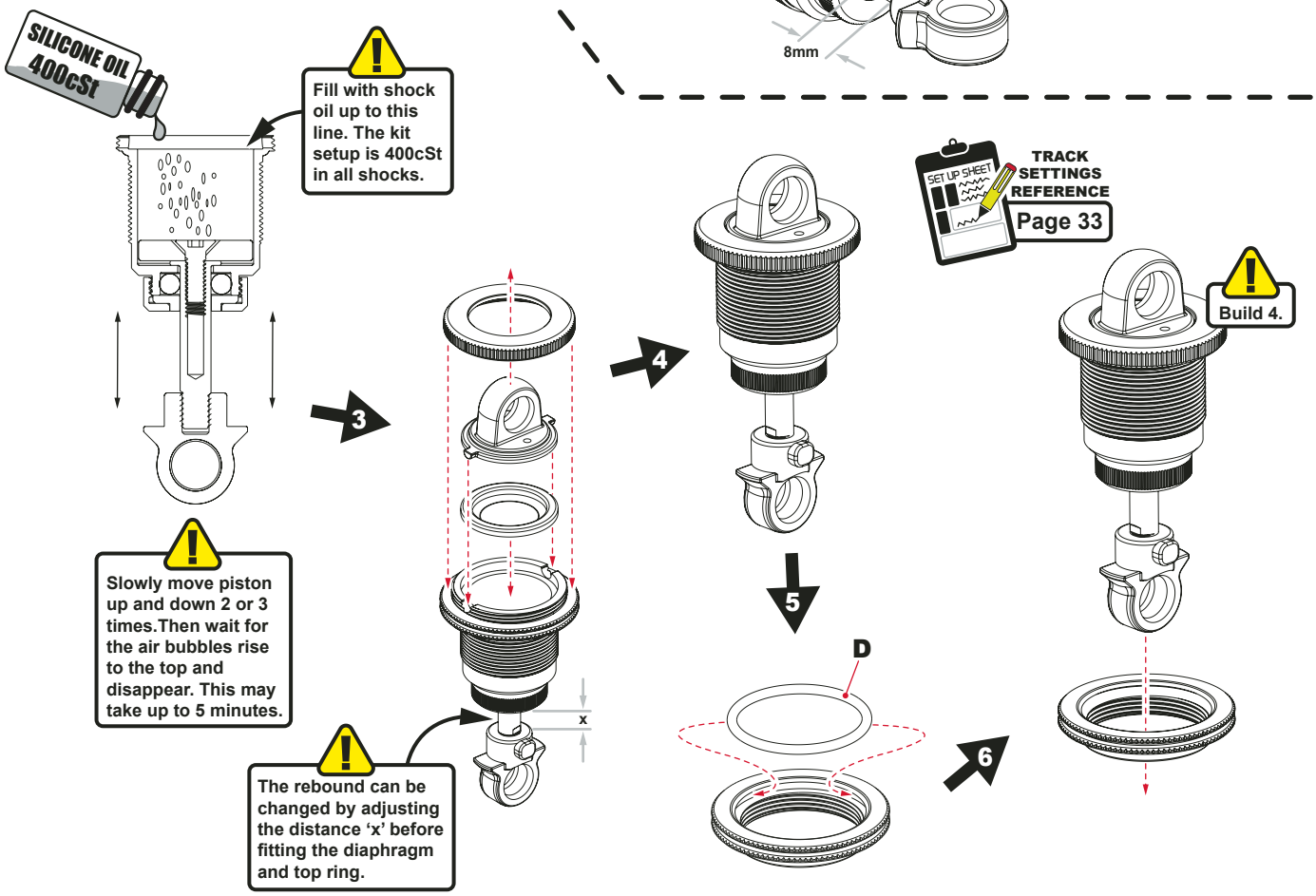

Mi10

Shock Absorber Installation

BAG C - Step 21

A x4
M3 x 8 Button Hd Screw

B x4
M3 Alloy Spacer 1.0mm

C x4
Upper Shock Ball 5.5mm

D x4
Lower Shock Ball 5.0mm

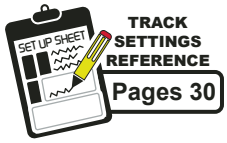

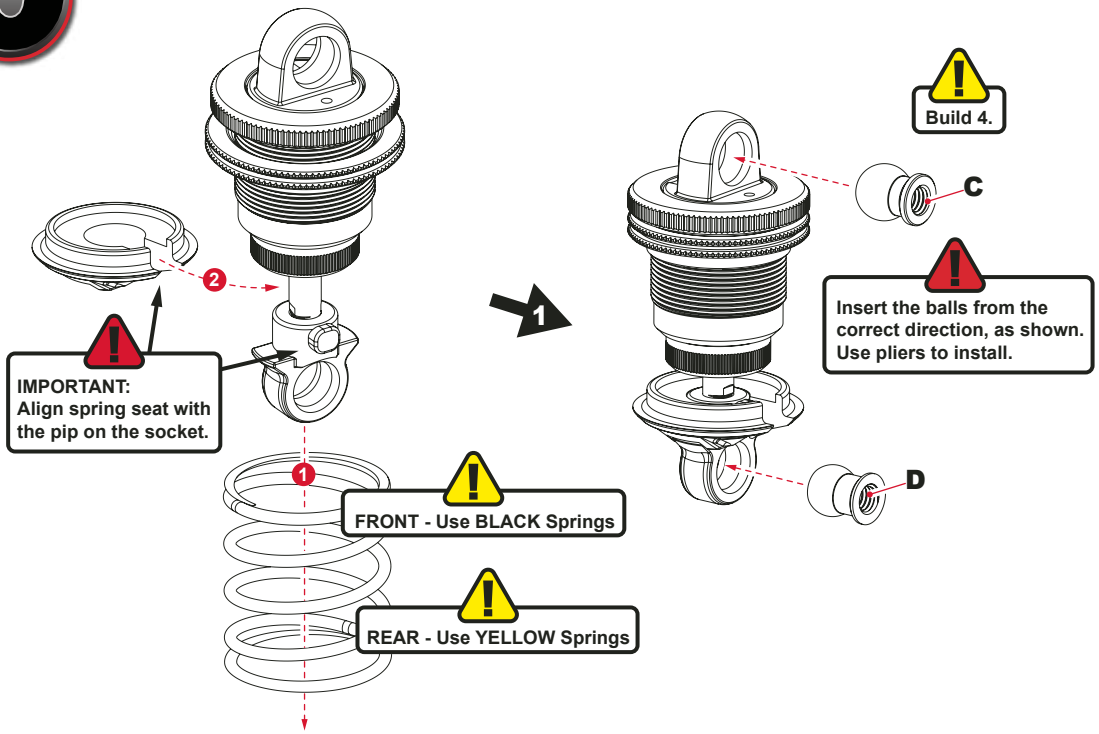

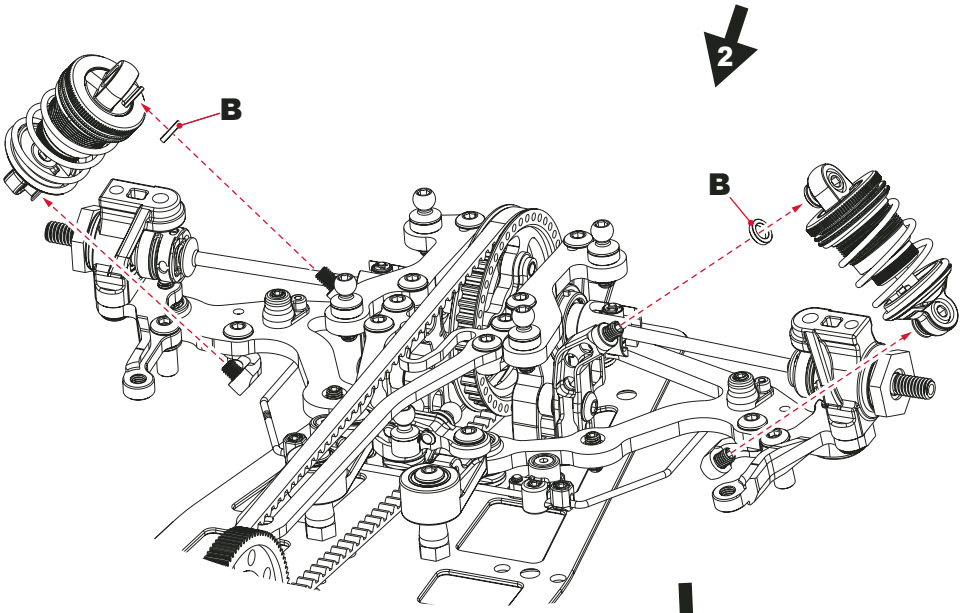

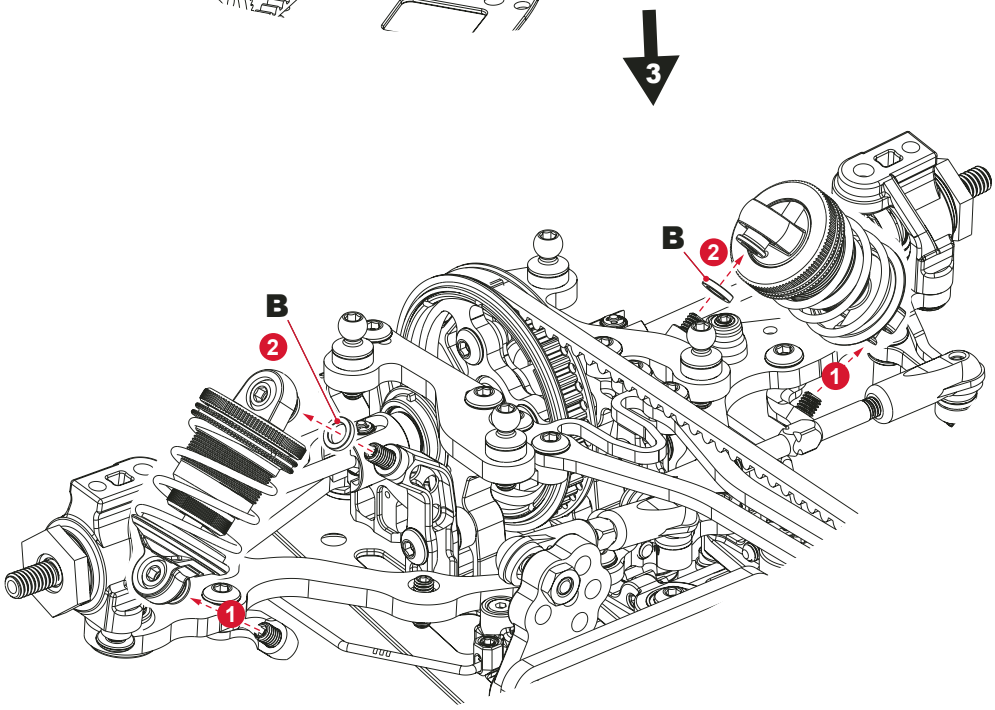

Battery Holder Installation

BAG C - Step 22

A x2
M3 Alloy Spacer 0.5mm

B x2
Grey 0.5 mm

C x4
M3 x 12 Button Hd

D x2
M3 x 16 Button Hd

E x4
M3 Alloy Spacer 3.0mm

F x2
M3 x 10 Csk Screw

G x2
M3 x 10 Button Hd

H x2 S
M3 x 10 Csk Hd Screw 110°

H x2 C
M3 x 12 Csk Screw

Three different plastic LiPo spacer pairs are included:
ULCG LiPos: 1.5mm (using 10mm Button Hd Screws **G**)
LCG LiPos: 3.5mm (using 12mm Button Hd Screws **C**)
Full height Lipos: 6.5mm (using 16mm Button Hd Screws **D**).

Adjust the screw **F** to set the front to rear position of the LiPo. Ensure there is always approximately 0.5mm of end float. This will help flexibility. The kit LiPo position is central.

The dowel pins on the LiPo mount may protrude 0.3mm through the chassis. You may remove any excess with a file or knife if required.

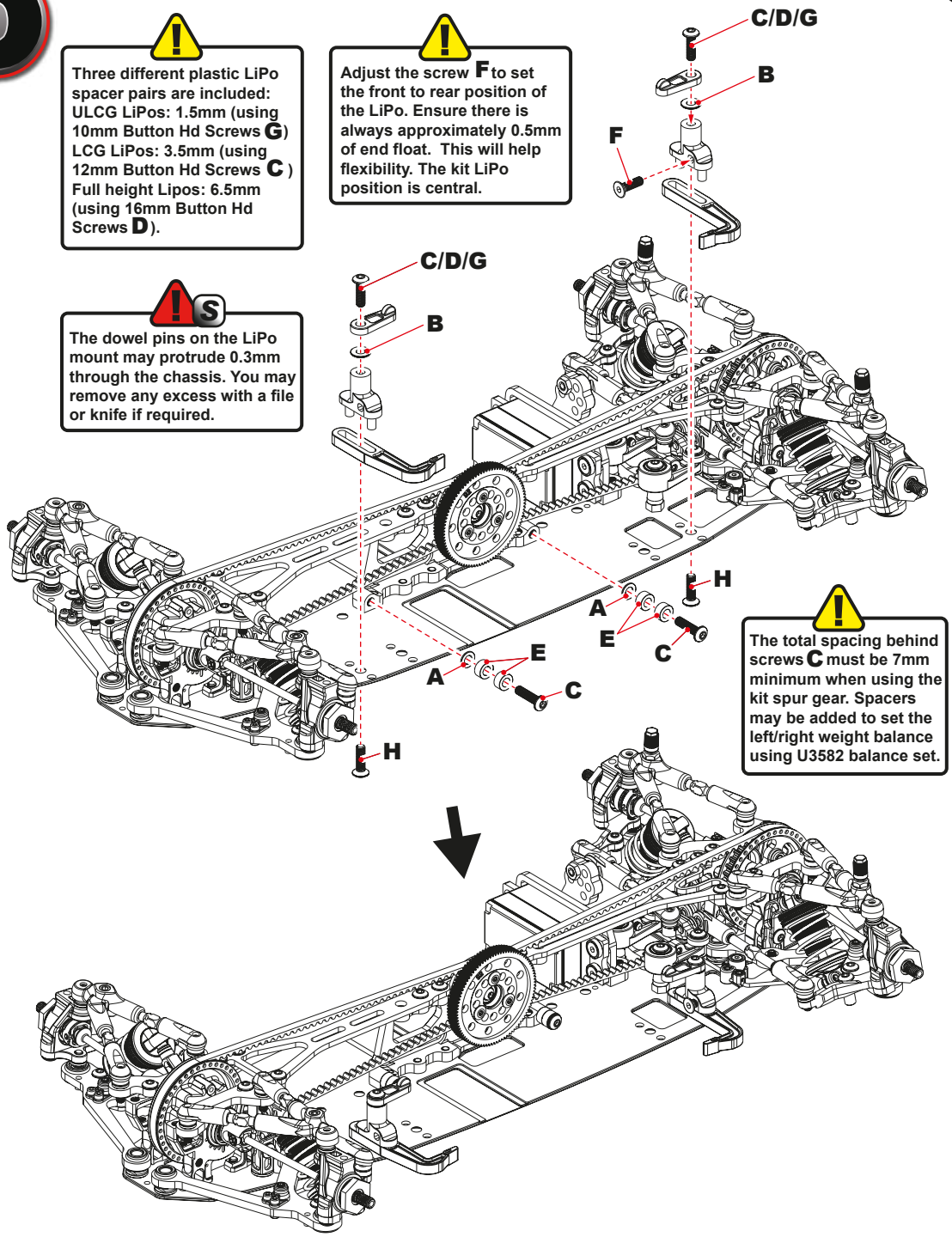

The total spacing behind screws **C** must be 7mm minimum when using the kit spur gear. Spacers may be added to set the left/right weight balance using U3582 balance set.

RACE TIP
Adjust the LiPo holder to allow approximately 0.5mm end float in all directions. This will help chassis flexibility.

Front Bumper Assembly

BAG C - Step 23a

A x2
M3 x 10 Button Hd

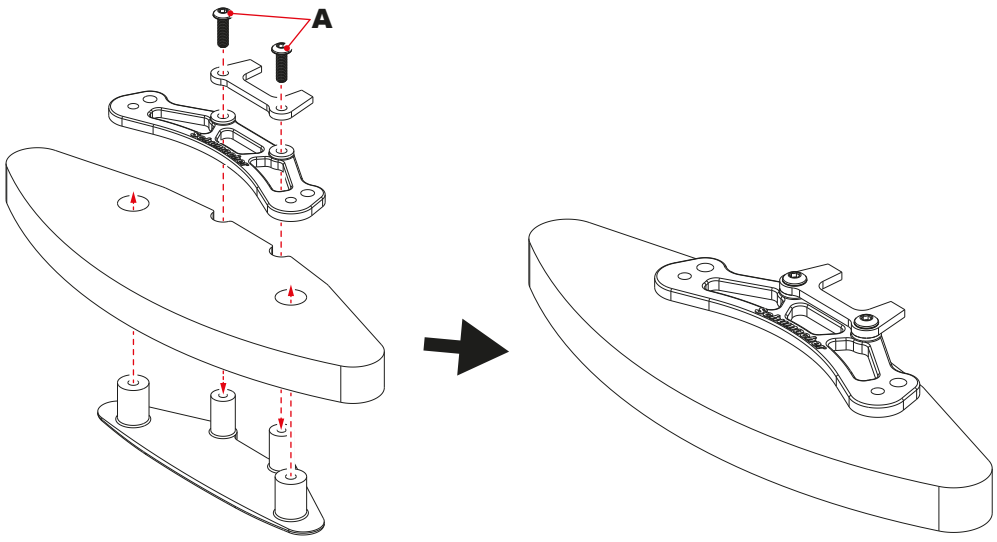

Front Bumper Assembly

BAG C - Step 23b

A x4
Pin ø1.5 X 11.8

B x2
M3 x 6 Button Hd

C x4
M3 x 10 Button Hd

D x2
M3 x 12 Button Hd

E x2 S
M3 x 10 Csk Hd Screw 110°

E x2 C
M3 x 10 Csk Hd Screw

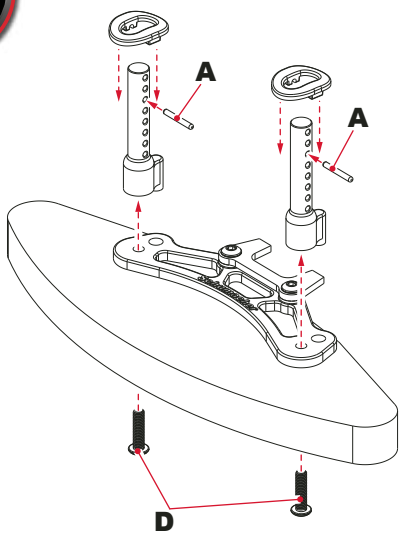

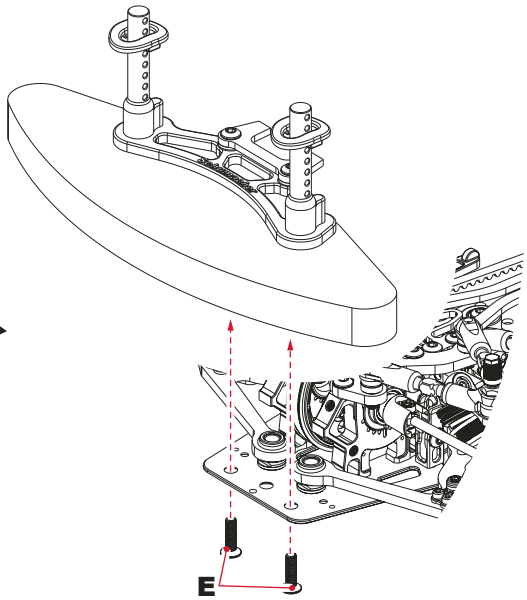

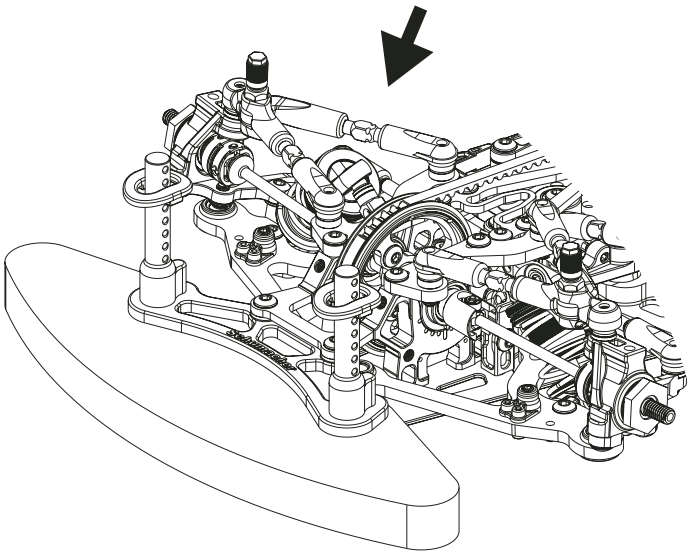

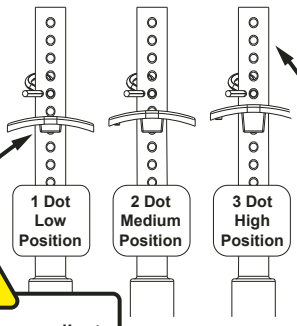

The body hangers adjusts the height of the body in 1.2mm steps. Note the dots on the underside.

The bodyposts can be trimmed down for looks and aerodynamics. Use a sharp knife or side cutters. Alternatively use: AM190041 Body Post Trimmer.

Rear Body Mount Assembly

BAG C - Step 23b

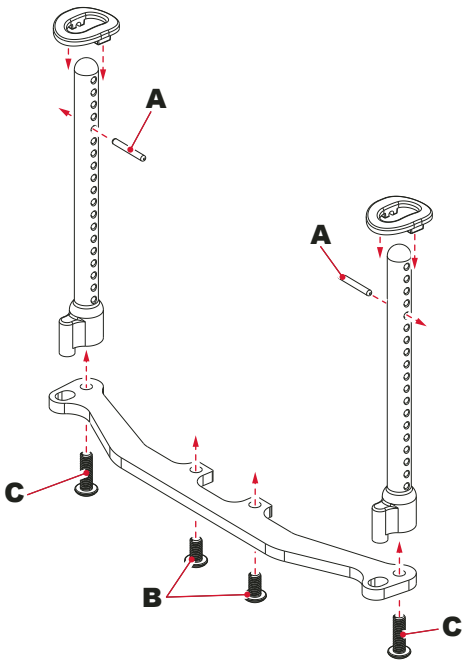

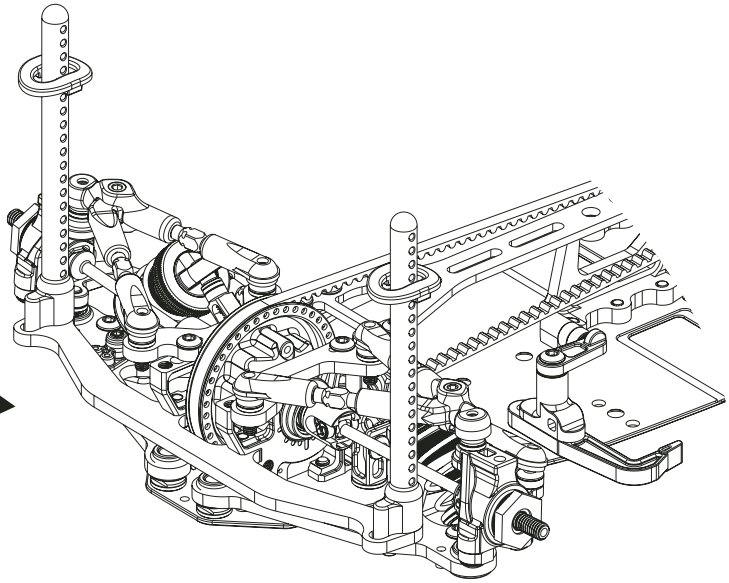

Motor Installation

BAG C - Step 24a

A x2
M3 x 8 Button Hd

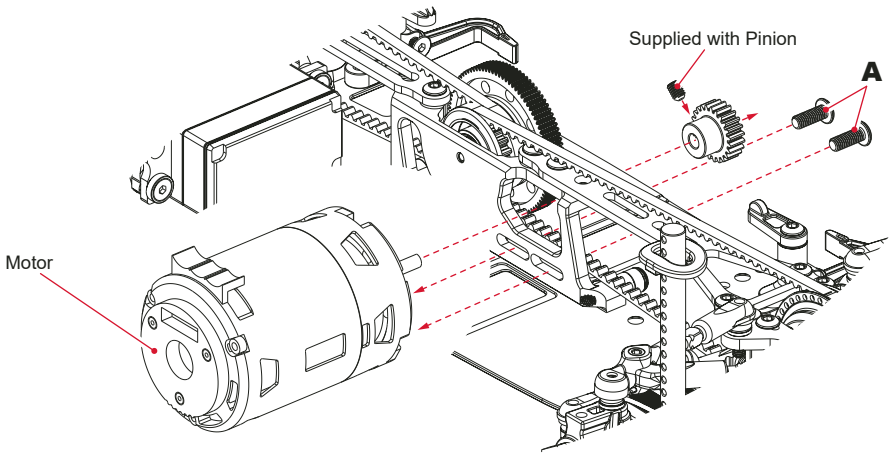

Electronics Installation

BAG C - Step 24b

A x1
M3 x 4 Cup Point Grub Screw

B x1 C
M3x 6 Csk Hd Screw

B x1 S
M3x 5 Csk Hd Screw 110°

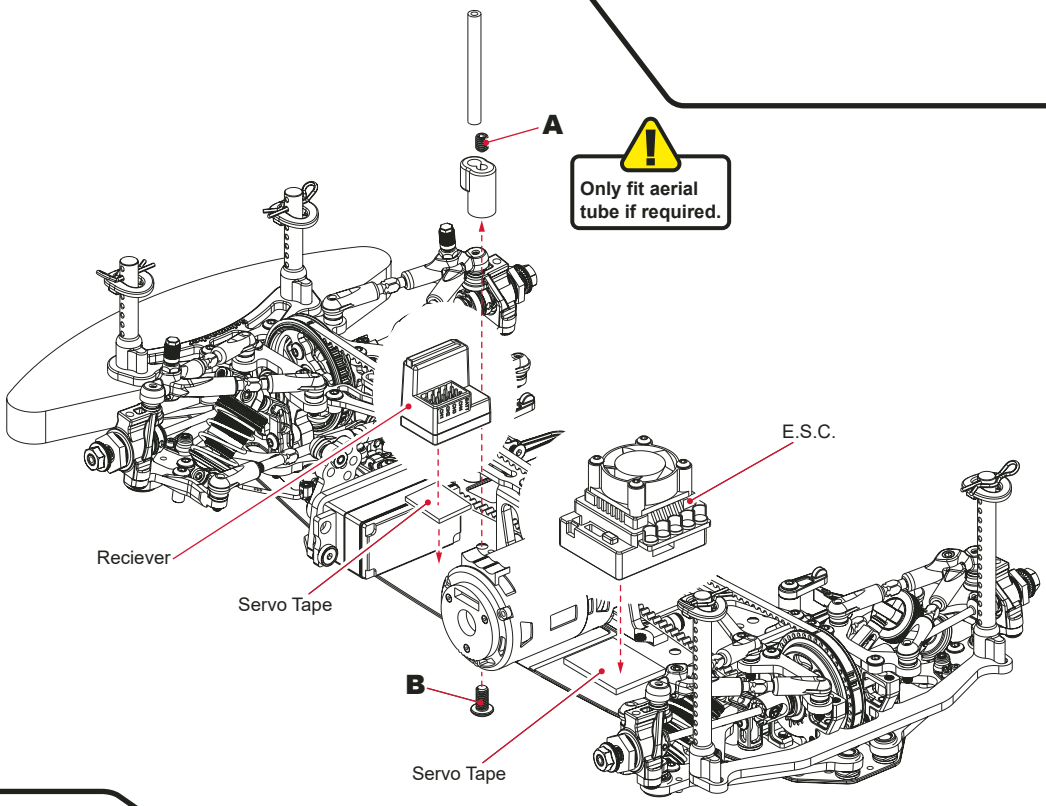

Lipo Installation

BAG C - Step 24c

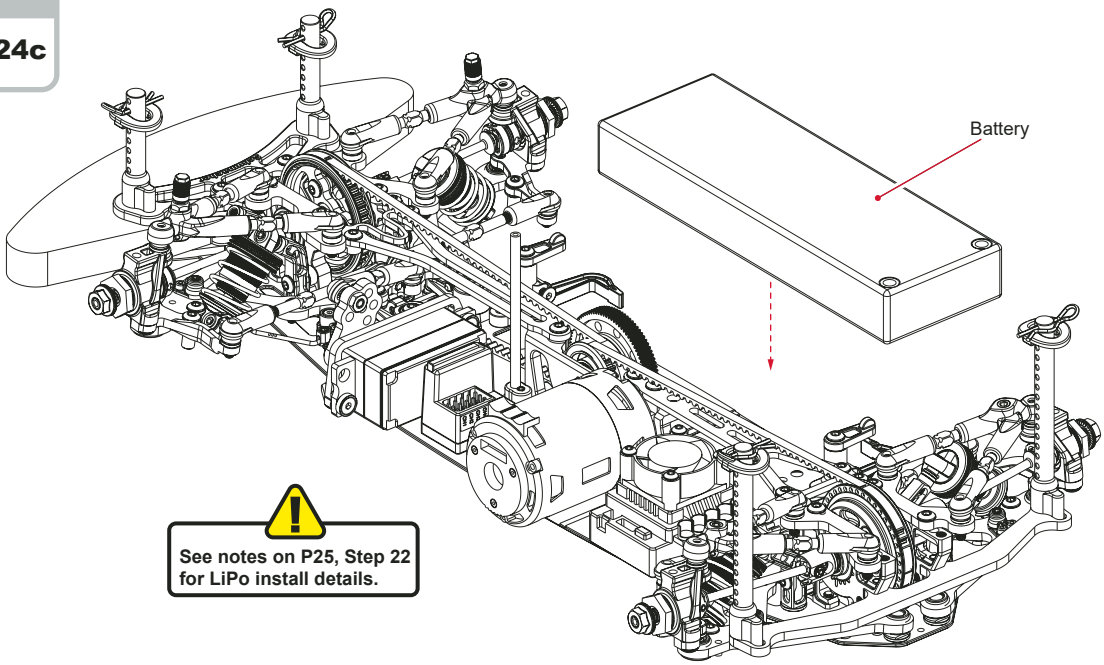

Mi10

Tyres & Wheels Installation

BAG C - Step 24d

A x2
Body Clip

B x2
Body Clip

C x4
M4 Serrated Nut

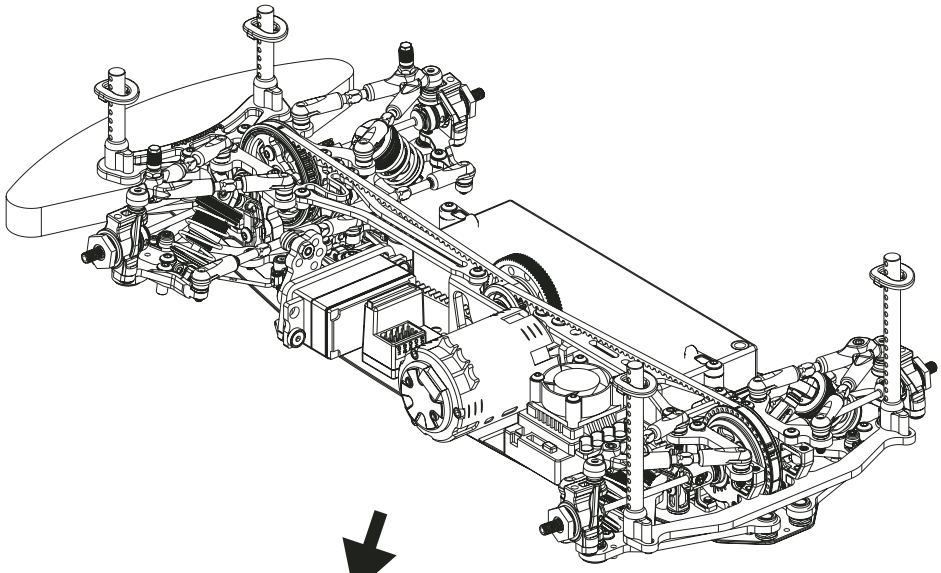

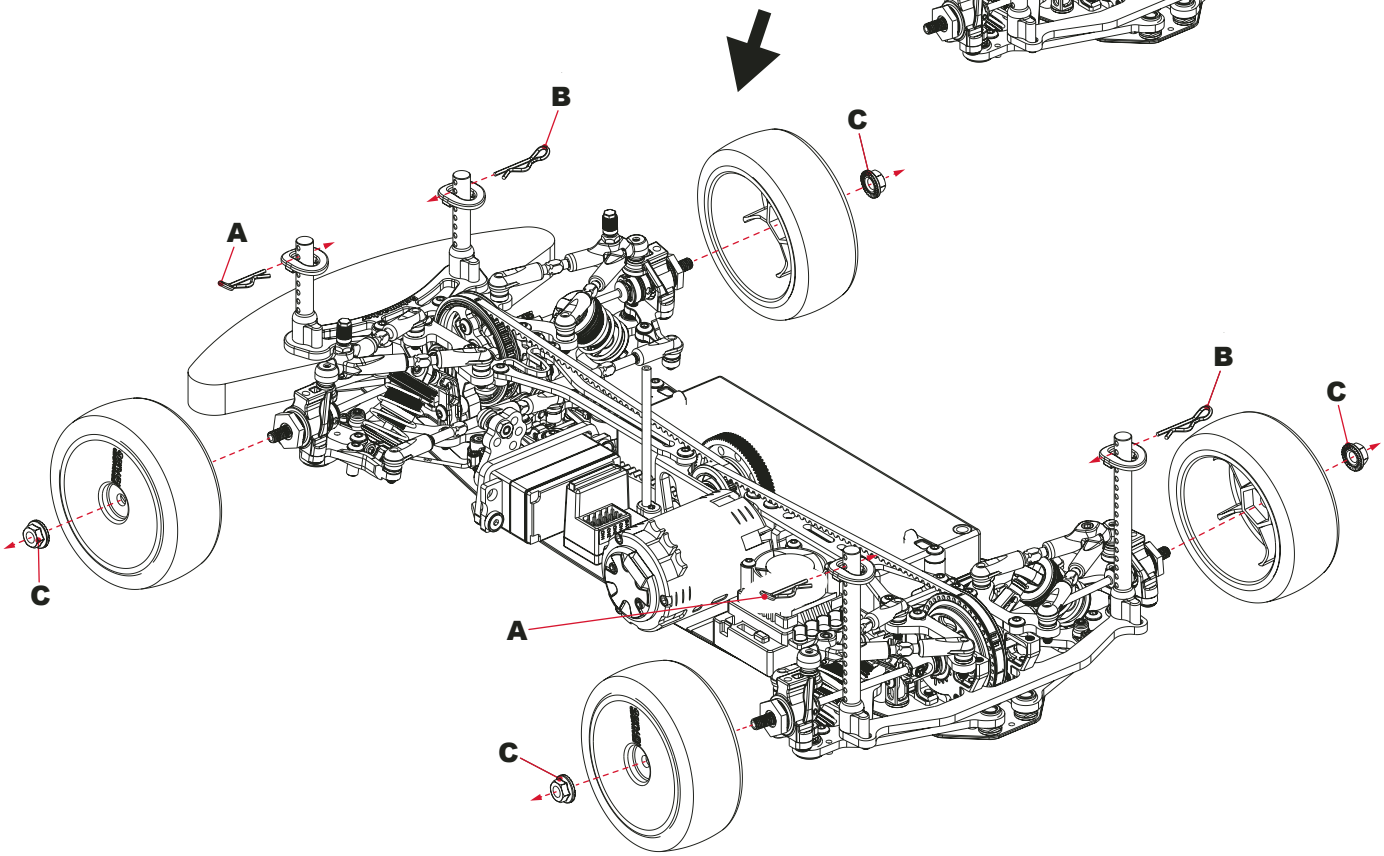

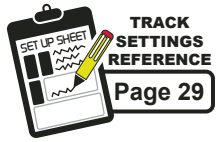

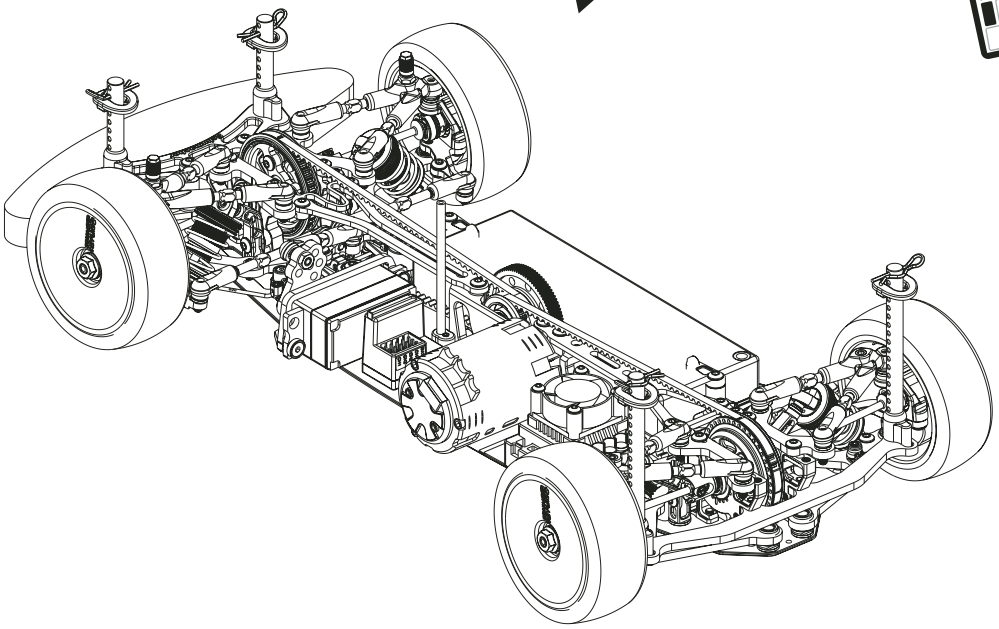

TRACK SETTINGS

RIDE HEIGHT

See Pages 23 & 24 Steps 20 & 21

Use the spring adjusters on the shock absorbers to adjust the front and rear ride heights. We recommend setting the ride height to around 5.0mm on carpet/ high traction tarmac/asphalt and 5.5mm on tarmac/asphalt or low traction carpet tracks.
This is measured between the bottom of the chassis and the ground with the car in running trim. First press the car down on to the ground and release it once or twice to settle the suspension before adjusting the ride height.
In general:
High traction levels/Smooth tracks =Lower ride height (4.6mm-5.2mm)
Low traction levels/Bumpy tracks = Higher ride height (5.2mm-6.0mm).

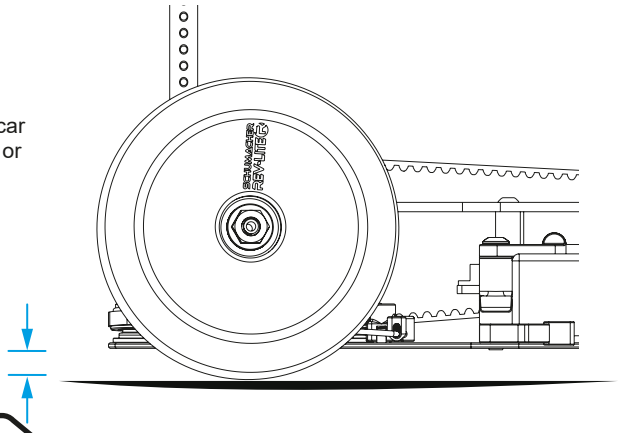

CAMBER

See Pages 15 & 16 Step 15

Front and rear camber is set by adjusting the pair of upper turnbuckles:
Shorter turnbuckles= More Negative camber.
Longer turnbuckles= Less Negative camber.
**The Camber and Castor setting should be set using a setup system such as SK-600069-01 or AM171040-LE combined with castor pointers U8771. Or the Aerox Digital Gauge, AX097.

In general the aim is to run the correct amount of camber for the tyre being used and the track conditions. Typically this is between 1.0°-2.5°.

Increasing the front and rear camber together will often result in more traction, but with a more sudden loss of grip when going beyond the limit. Less overall camber will offer a more progressive slide but may have less overall grip.
More castor may be applied to the front or rear, normally resulting in more grip at that end of the car. The team suggest a starting camber of 2° Rear and 1.5° Front, increasing to 2° Front camber if more front grip/steering is needed.

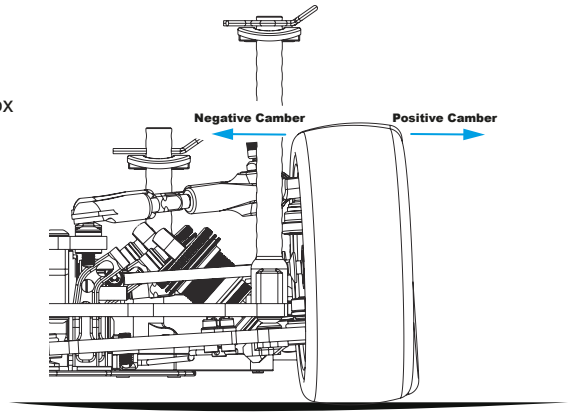

CASTOR

See Pages 15 & 16 Step 15

Castor can be set by adjusting the upper turnbuckles. After camber has been set, lengthen one turnbuckle, and shorten the other by the same amount, until the castor is set as desired.
**The Camber and Castor setting should be set using a setup system such as SK-600069-01 or AM171040-LE combined with castor pointers U8771. Or the Aerox Digital Gauge, AX097.
More front castor will result in a smoother, less responsive initial steering response, with more mid corner/ on power exit steering.
Less front castor will give a more aggresive initial steering response but less steering thereafter.
Rear 'castor' can be adjusted, altering the wheelbase. Kit setting is 2°.

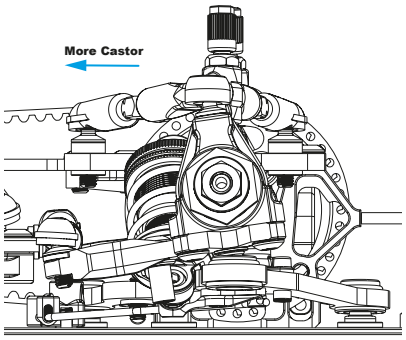

TRACK WIDTH

See Pages 13, 14 & 28 Steps 13, 14 & 24d

The track width may be adjusted using 2 different hex widths, or shims:
U8333 - Wheel Hex Spacers 0.25, 0.5, 0.75mm - (pk12)
U8720 - Alloy Wheel Hex - Mi9 (pr)
U8762 - Alloy Narrow Wheel Hex (-0.75mm) - Mi9 (pr)

Increasing the rear track width provides more rear stability/less rotation and vice versa.
Increasing the front track width provides a less agressive/less rotation and vice versa.
A wider car is better suited to high traction conditions and a narrower car to low traction conditions.

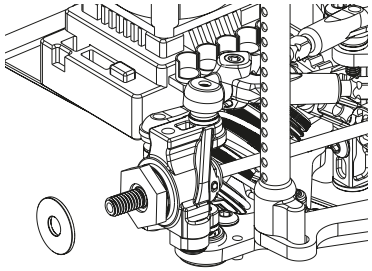

STATIC REAR TOE

See Page 18 Step 17

Static rear toe is measured on setup gauges such as SK-600069-01 or AM171040-LE and is the toe angle of the rear wheels when at ride height. The kit setup is 3°.
This is adjusted simply by altering the length of the rear turnbuckles shown.
More rear static toe in provides more stability, rear grip and forward traction.
Less rear static toe in offers more rotation providing the rear stability is enough to drive confidently through the corner. There will be less forward traction exiting the corner however.
In low traction conditions the team suggests a range between 3°and 4°.
In high traction conditions the team suggests a range between 2° and 3°.

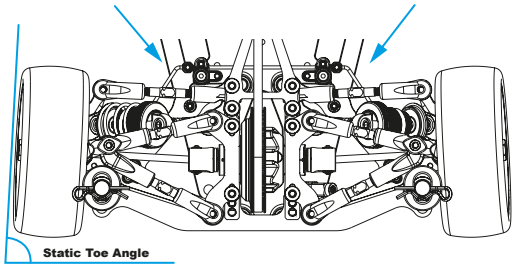

DYNAMIC REAR TOE

See Page 15 Step 15

Dynamic rear toe is a toe in angle that changes with roll or squat. This allows for a rising rate toe setting through a corner providing good entry steering but with more stability through the corner and more forward traction on corner exit.
The roll centre or rear castor setup affects passive toe gain a specific spacer provides. 1mm gives approximately static toe in most common car setups.
The team recommend:
- 1mm in high traction conditions or when a lot of steering is needed.
- 4.5mm in low traction conditions or when a lot of stability is needed.

Kit setup is 2.5mm, a good neutral point.

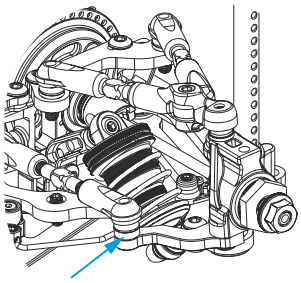

FRONT TOE

See Page 18 Step 17

The front toe is set by adjusting the steering turnbuckles.
Toe in will give a more stable car and less responsive/nervous initial steering.
Toe out will give a more agressive car with more responsive initial steering.
The team recommend a range between 0° and 1° of toe out. It is very rare to benefit from toe in on the front of the car.

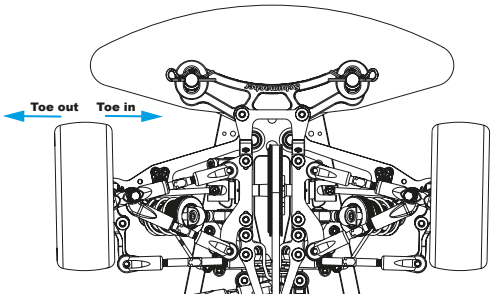

SHOCK SPRINGS

See Page 24 Step 21

Shock springs are used to set the suspension stiffness.
The team recommend a starting setup using CORE RC Black springs at the front and Yellow at the rear (included).

Stiffer springs increase response, forward traction and high speed stability. The track should be smooth when going to very stiff springs.

Softer springs slow down direction change but may provide more overall grip, when the track grip is low. They may cause high speed stability issues if the grip is too high. Soft springs can be better when the track is bumpy. A softer car can sometimes be a benefit in very high grip, in order to prevent traction roll.

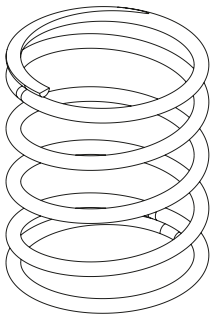

SHOCK ANGLES

See Page 24 Step 21

Similar to the shock spring setup, the shock angles can provide fine tuning over the suspension stiffness.
A more angled shock setup (lower number of shims) creates a softer setup which is less responsive, often suited to high traction conditions.

A more upright shock setup (higher number of shims) creates a stiffer setup which is more responsive, often suited to lower traction conditions.

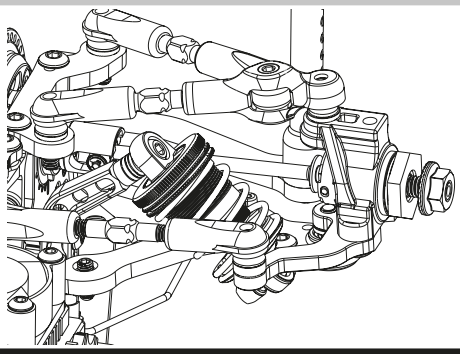

ANTI ROLL BARS

See Pages 20 & 21 Steps 19

Anti roll bars allow the tuning of roll stiffness and change the way that the weight is transferred.
A stiffer rear roll bar will reduce entry steering but increase on power steering.
A stiffer front roll bar will increase entry steering, but provide a smoother handling through the middle of the corner.

The roll bars need to be set equally left to right. This is done by changing the height of the roll bar adjuster. With the shocks off, check the roll bar lifts the opposite side when lifted to an equal height. A great tool for this is AX015.

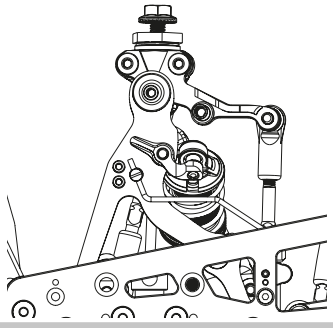

DROOP

See Pages 10 & 11 Steps 9 & 10

The starting point for droop suggested by the team is 22.6mm rear, 23.8mm front. These numbers are checked on the Aerox droop gauge set. AX015. This is the measurement between the chassis underside and the axle centre. Droop is adjusted using the grub screw illustrated.
The suggested range is:
Rear- Between 20.4mm in low traction and 24.0mm in high traction.
Increasing the rear droop often provides more stability.
Front- Between 21.4mm in low traction and 25mm in high traction.
Increasing the front droop gives a more agressive handling.

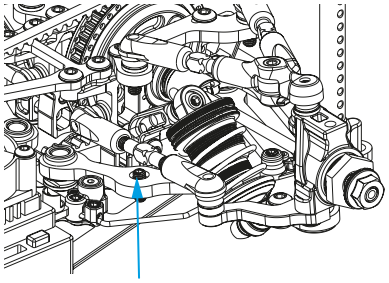

UPPER INNER LINK HEIGHT

See Page 8 Step 7

The washers under the 4 upper inner link ball studs are the main suggested method of changing the angle of the upper links. Generally, less washers at that end of the car gives more grip. Adding washers in the front/rear together can provide a freer car with more rotation. Suited best to high traction.
The high transmission housings are included in the kit. Replacing these with the low transmission housings (U9522/3) will lower the height of the ballstuds by 2mm. Make sure to take this into consideration when changing between high and low housings.

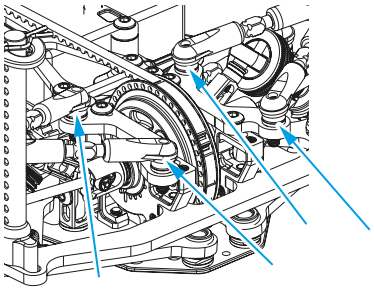

LOWER WISHBONE SPACERS

See Page 10 & 11 Steps 9 & 10

Higher wishbone balls= Raised roll centre, suited to higher traction conditions.
Lower wishbone balls= Lower roll centre, suited to lower traction conditions.

The team often uses wishbone balls 0.5mm lower in the front than the rear, providing more steering, but a slightly more difficult car to drive.

Lowering the front-front balls (angling the front wishbones down to the front of the car), by 0.5mm (the kit setting) is another team favourite. This creates some anti-dive, giving a much smoother steering, particularly on corner entry.

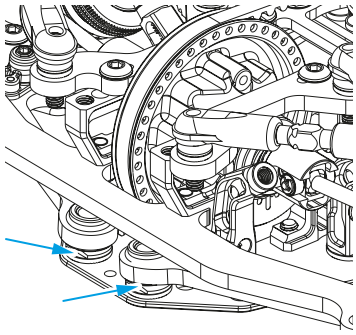

GEAR DIFF

See Page 4 Step 3

Gear diff oil can be changed to affect car handling.
Generally, high traction conditions = thicker oil. (7k-12k)
Low traction conditions = thinner oil. (3K-7K),
A thicker gear diff oil will have a much smoother off power, corner entry feeling, preventing corner entry over rotation. It will also make the car feel less likely to slide off power, in the corner. It will however have more on power steering, and can feel like on power oversteer.

Thinner gear diff oil will create the opposite effect. More aggressive corner entry, and more steering off power in the corner. It will have less on power steering, but will feel much easier to put the power on without oversteering.

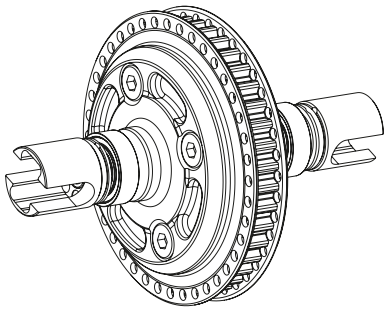

CHASSIS FLEXIBILITY

See Page 2 Step 1

High grip conditions = Stiffer chassis setup. Low Grip conditions = Flexible chassis setup.
The Aluminium chassis is the stiffest option and is best in extremely high grip conditions.
The Steel chassis is best suited for medium to high grip conditions and has the lowest centre of gravity.
The CF chassis is best in low or medium grip conditions.

The motor mount has 4 chassis screw options. Use more screws to increase the overall chassis stiffness. A minimum of 2 screws is required.

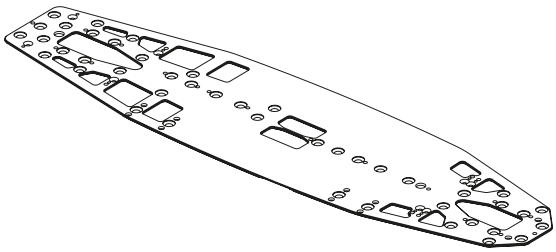

DIFF/SPOOL HEIGHT

See Pages 5 & 6 Steps 3 & 4

The Diff/Spool height can be adjusted in two ways.
• The eccentric housings can be rotated 180° to offer a 1mm shift in diff height.
• The Optional 'Low' Transmission housings can be used to decrease the Diff/Spool height by -2mm.
The low diff or spool position provides more grip at that end of the car, and is suited to low or medium traction conditions.

Diff Height	Eccentric Orientation	Eccentric Type	Transmission Housing Type
2.0mm	*Up ▲*	*+0.5mm (Option U8777)*	*High (Kit)*
1.5mm	*Up ▲*	*Kit*	*High (Kit)*
0.5mm	*Down ▼*	*Kit*	*High (Kit)*
0.0mm	*Down ▼ / Up ▲*	*+0.5mm (Option U8777)*	*High (Kit) or Low (U9522/U9523)*
-0.5mm	*Up ▲*	*Kit*	*Low (U9522/U9523)*
-1.5mm	*Down ▼*	*Kit*	*Low (U9522/U9523)*

-1.5mm **DIFF or Spool Height** **+2.0mm**

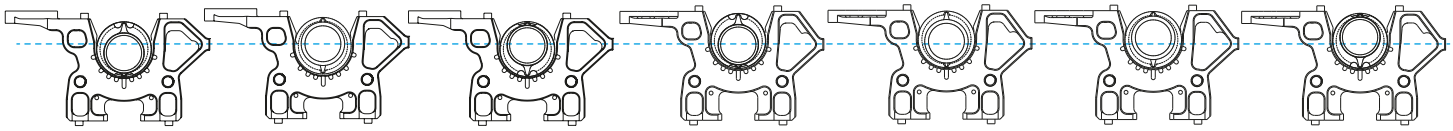

Diff Height: -1.5mm
Orientation: Down ▼
Eccentric Type: Kit
Trans Housing: Low (U9522/U9523)

Diff Height: -0.5mm
Orientation: Up ▲
Eccentric Type: Kit
Trans Housing: Low (U9522/U9523)

Diff Height: 0.0mm
Orientation: Up ▲
Eccentric Type: U8777 Option
Trans Housing: Low (U9522/U9523)

Diff Height: 0.0mm
Orientation: Down ▼
Eccentric Type: U8777 Option
Trans Housing: High (Kit)

Diff Height: +0.5mm
Orientation: Down ▼
Eccentric Type: Kit
Trans Housing: High (Kit)

Diff Height: +1.5mm
Orientation: Up ▲
Eccentric Type: Kit
Trans Housing: High (Kit)

Diff Height: +2.0mm
Orientation: Up ▲
Eccentric Type: U8777 Option
Trans Housing: High (Kit)

WEIGHT DISTRIBUTION

There are several positions intended for weight placement in the front and rear of the car. Please see the setup sheet for suggested placements. We recommend the use of U8773 and U8774 for this.

For the most neutral car balance, we recommend a 50:50 weight distribution. This is easily achieved with no weights and centrally placed electronics.
More rearwards weight generally gives a more agressive car with more steering.
More forwards weight generally gives a smoother car handling with less steering.

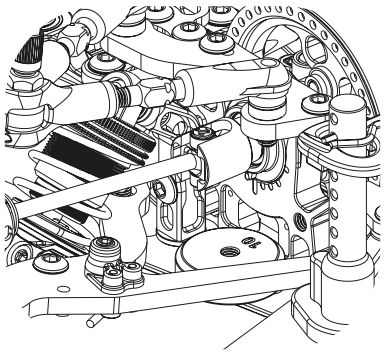

ACKERMANN

See Page 17 Step 16

Ackerman is adjusted by washers on the centre track rod. This is positioned 1mm more rearward than the Mi9 for more options. Adding more washers gives a more aggressive steering feeling and is the best option when more steering rotation is required. It gives more outside wheel lock. Best used when maximum mid corner steering is required. This is a good option for very technical outdoor tracks. Less washers gives a smoother less aggressive feel reducing the outer wheel lock. Try 1mm for tarmac racing and 0mm for carpet or higher grip surfaces.

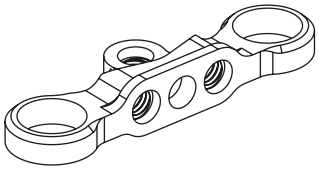

BODY HEIGHT

See Page 26 Steps 23b

The height of the body is very important to performance.
Height 'A' must be between 110mm and 115mm. Higher here provides more rear grip and improved drivability. We suggest 113mm as a good starting height.
To set height 'B' (see page 12 to locate 'body stop screws')
1) Remove body hangers from the body posts temporarily.
2) Adjust the body stop screws to set 'B' to between 2mm-4mm.
3) Fit body hangers to the posts to acheive a 'B' height between 5mm-6mm.
This allows to run the body lower to gain front downforce without excessive touching against the track surface.
If you prefer not to use the body stop screws, set 'B' to between 8mm-9mm.
Height 'C' should be cut to achieve a height of between 6mm-9mm. Adjust if exessive touching occurs.

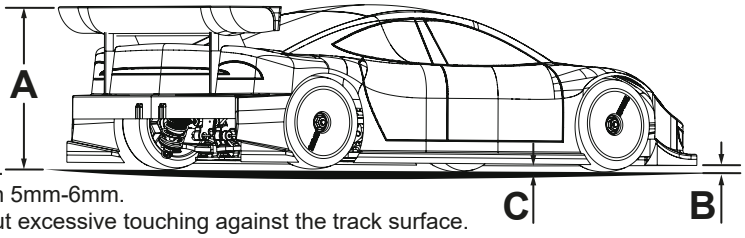

SHOCK OIL

See Page 23 Step 20

The aim is to achieve improved handling over bumps and control the weight transfer of the car.
If the track is particularly bumpy, decrease the shock oil viscosity to help handling over bumps.
If the traction is low, lowering the shock oil to improve weight transfer and generate more grip.
If the traction is high, increasing the shock oil to make the car smoother and less unpredictable.
In higher temperature, increase the shock oil to manage tyre temperature.
Our suggested range is between 250cSt and 600cSt, when using Core-Rc shock oil with kit pistons.

TOP DECK FLEX OPTIONS

See Page 7 Step 6

The kit includes a split C/F, 2 piece 2mm topdeck design. The front topdeck has 2 dowels and screws. Adding an additional dowel and screw into the forward position may make the car more responsive, but this option is rarely used by the team.
The rear top deck has 3 dowel/screw positions, the rear offering more stability and the front offers the most steering/rotation. Adding multiple dowels and screws can stiffen the rear offering further stability.
We also have this available in 1.6mm C/F which will make the car safer to drive and offer more traction in lower grip conditions. (U9542)
There is also a 1 piece 'TITC' top deck which is normally used on high speed high traction tracks and offers a smooth feeling. (U9550)

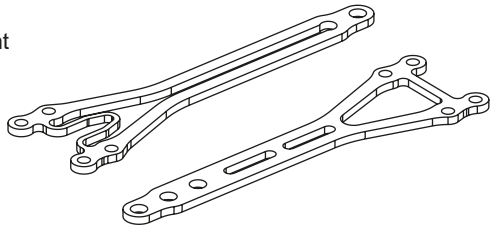

UPPER INNER LINK LENGTH

See Page 8 Step 7

The upper link length can be adjusted using Optional 1 and 2 Notch C/F link mounts - U9543, U9553 (Front) U9544, U9554 (Rear). 1 Notch shortens the links by 1mm and can be used to gain more response and direction change usually where the grip is high. 2 Notch lengthens the upper link by 1mm and can induce more roll, sometimes good in lower grip conditions. Although they can also be used in higher grip for less initial response if needed. In higher grip 2 Notch can also make the car more alive mid corner with more steering at the apex.

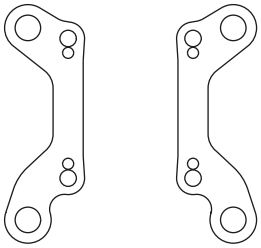

GEAR RATIO CHART - 48DP

Maximum tooth sum = 115
Minimum tooth sum = 83

Pinion \ Spur	69	70	71	72	73	74	75	76	77	78	79	80	81	82	83	84	85	86	87	88	89
14	8.96	9.09	9.22	9.35	9.48	9.61	9.74	9.87	10.00	10.12	10.25	10.38	10.51	10.64	10.77	10.90	11.03	11.16	11.29	11.42	11.55
15	8.36	8.48	8.60	8.72	8.84	8.96	9.09	9.21	9.33	9.45	9.57	9.69	9.81	9.93	10.06	10.18	10.30	10.42	10.54	10.66	10.78
16	7.84	7.95	8.06	8.18	8.29	8.40	8.52	8.63	8.75	8.86	8.97	9.09	9.20	9.31	9.43	9.54	9.65	9.77	9.88	10.00	10.11
17	7.37	7.48	7.59	7.70	7.80	7.91	8.02	8.12	8.23	8.34	8.44	8.55	8.66	8.77	8.87	8.98	9.09	9.19	9.30	9.41	9.51
18	6.96	7.07	7.17	7.27	7.37	7.47	7.57	7.67	7.77	7.87	7.97	8.08	8.18	8.28	8.38	8.48	8.58	8.68	8.78	8.88	8.98
19	6.60	6.69	6.79	6.88	6.98	7.08	7.17	7.27	7.36	7.46	7.55	7.65	7.75	7.84	7.94	8.03	8.13	8.22	8.32	8.42	8.51
20	6.27	6.36	6.45	6.54	6.63	6.72	6.81	6.90	7.00	7.09	7.18	7.27	7.36	7.45	7.54	7.63	7.72	7.81	7.90	8.00	8.09
21	5.97	6.06	6.14	6.23	6.32	6.40	6.49	6.58	6.66	6.75	6.83	6.92	7.01	7.09	7.18	7.27	7.35	7.44	7.53	7.61	7.70
22	5.70	5.78	5.86	5.95	6.03	6.11	6.19	6.28	6.36	6.44	6.52	6.61	6.69	6.77	6.85	6.94	7.02	7.10	7.19	7.27	7.35
23	5.45	5.53	5.61	5.69	5.77	5.84	5.92	6.00	6.08	6.16	6.24	6.32	6.40	6.48	6.56	6.64	6.71	6.79	6.87	6.95	7.03
24	5.22	5.30	5.37	5.45	5.53	5.60	5.68	5.75	5.83	5.90	5.98	6.06	6.13	6.21	6.28	6.36	6.43	6.51	6.59	6.66	6.74
25	5.01	5.09	5.16	5.23	5.30	5.38	5.45	5.52	5.60	5.67	5.74	5.81	5.89	5.96	6.03	6.10	6.18	6.25	6.32	6.40	6.47
26	4.82	4.89	4.96	5.03	5.10	5.17	5.24	5.31	5.38	5.45	5.52	5.59	5.66	5.73	5.80	5.87	5.94	6.01	6.08	6.15	6.22
27	4.64	4.71	4.78	4.84	4.91	4.98	5.05	5.11	5.18	5.25	5.31	5.38	5.45	5.52	5.58	5.65	5.72	5.79	5.85	5.92	
28	4.48	4.54	4.61	4.67	4.74	4.80	4.87	4.93	5.00	5.06	5.12	5.19	5.25	5.32	5.38	5.45	5.51	5.58	5.64		
29	4.32	4.38	4.45	4.51	4.57	4.63	4.70	4.76	4.82	4.89	4.95	5.01	5.07	5.14	5.20	5.26	5.32	5.39			
30	4.18	4.24	4.30	4.36	4.42	4.48	4.54	4.60	4.66	4.72	4.78	4.84	4.90	4.96	5.03	5.09	5.15				
31	4.04	4.10	4.16	4.22	4.28	4.34	4.39	4.45	4.51	4.57	4.63	4.69	4.75	4.80	4.86	4.92					
32	3.92	3.97	4.03	4.09	4.14	4.20	4.26	4.31	4.37	4.43	4.48	4.54	4.60	4.65	4.71						
33	3.80	3.85	3.91	3.96	4.02	4.07	4.13	4.18	4.24	4.29	4.35	4.40	4.46	4.51							
34	3.68	3.74	3.79	3.85	3.90	3.95	4.01	4.06	4.11	4.17	4.22	4.27	4.33								
35	3.58	3.63	3.68	3.74	3.79	3.84	3.89	3.94	4.00	4.05	4.10	4.15									
36	3.48	3.53	3.58	3.63	3.68	3.73	3.78	3.83	3.88	3.93	3.98										
37	3.39	3.43	3.48	3.53	3.58	3.63	3.68	3.73	3.78	3.83											
38	3.30	3.34	3.39	3.44	3.49	3.54	3.58	3.63	3.68												
39	3.21	3.26	3.31	3.35	3.40	3.44	3.49	3.54													
40	3.13	3.18	3.22	3.27	3.31	3.36	3.40														
41	3.05	3.10	3.14	3.19	3.23	3.28															
42	2.98	3.03	3.07	3.11	3.16																
43	2.91	2.95	3.00	3.04																	
44	2.85	2.89	2.93																		
45	2.78	2.82																			
46	2.72																				

GEAR RATIO CALCULATIONS

Internal Ratio = $1.\dot{8}\dot{1}$: 1

Final Drive Ratio (FDR) = $\frac{\text{SPUR} \times 1.\dot{8}\dot{1}}{\text{PINION}}$

SPUR = $\frac{\text{FDR} \times \text{PINION}}{1.\dot{8}\dot{1}}$

PINION = $\frac{\text{SPUR} \times 1.\dot{8}\dot{1}}{\text{FDR}}$

NOTES

GEAR RATIO CHART - 64DP

Maximum tooth sum = 154
Minimum tooth sum = 111

Spur / Pinion	82	90	92	94	96	98	100	102	104	106	108	110	112	114	116	120
21		7.79	7.96	8.13	8.31	8.48	8.65	8.83	9.00	9.17	9.35	9.52	9.69	9.87	10.04	10.38
22		7.43	7.60	7.76	7.93	8.09	8.26	8.42	8.59	8.76	8.92	9.09	9.25	9.42	9.58	9.91
23		7.11	7.27	7.43	7.58	7.74	7.90	8.06	8.22	8.37	8.53	8.69	8.85	9.01	9.16	9.48
24		6.81	6.96	7.12	7.27	7.42	7.57	7.72	7.87	8.03	8.18	8.33	8.48	8.63	8.78	9.09
25		6.54	6.69	6.83	6.98	7.12	7.27	7.41	7.56	7.70	7.85	8.00	8.14	8.29	8.43	8.72
26		6.29	6.43	6.57	6.71	6.85	6.99	7.13	7.27	7.41	7.55	7.69	7.83	7.97	8.11	8.39
27		6.06	6.19	6.32	6.46	6.59	6.73	6.86	7.00	7.13	7.27	7.40	7.54	7.67	7.81	8.08
28		5.84	5.97	6.10	6.23	6.36	6.49	6.62	6.75	6.88	7.01	7.14	7.27	7.40	7.53	7.79
29	5.14	5.64	5.76	5.89	6.01	6.14	6.26	6.39	6.52	6.64	6.77	6.89	7.02	7.14	7.27	7.52
30	4.96	5.45	5.57	5.69	5.81	5.93	6.06	6.18	6.30	6.42	6.54	6.66	6.78	6.90	7.03	7.27
31	4.80	5.27	5.39	5.51	5.63	5.74	5.86	5.98	6.09	6.21	6.33	6.45	6.56	6.68	6.80	7.03
32	4.65	5.11	5.22	5.34	5.45	5.56	5.68	5.79	5.90	6.02	6.13	6.25	6.36	6.47	6.59	6.81
33	4.51	4.95	5.06	5.17	5.28	5.39	5.50	5.61	5.73	5.84	5.95	6.06	6.17	6.28	6.39	6.61
34	4.38	4.81	4.91	5.02	5.13	5.24	5.34	5.45	5.56	5.66	5.77	5.88	5.98	6.09	6.20	6.41
35	4.25	4.67	4.77	4.88	4.98	5.09	5.19	5.29	5.40	5.50	5.61	5.71	5.81	5.92	6.02	
36	4.14	4.54	4.64	4.74	4.84	4.94	5.05	5.15	5.25	5.35	5.45	5.55	5.65	5.75	5.85	
37	4.02	4.42	4.52	4.61	4.71	4.81	4.91	5.01	5.11	5.20	5.30	5.40	5.50	5.60	5.70	
38	3.92	4.30	4.40	4.49	4.59	4.68	4.78	4.88	4.97	5.07	5.16	5.26	5.35	5.45	5.55	
39	3.82	4.19	4.28	4.38	4.47	4.56	4.66	4.75	4.84	4.94	5.03	5.12	5.22	5.31		
40	3.72	4.09	4.18	4.27	4.36	4.45	4.54	4.63	4.72	4.81	4.90	5.00	5.09	5.18		
41	3.63	3.99	4.07	4.16	4.25	4.34	4.43	4.52	4.61	4.70	4.78	4.87	4.96			
42	3.54	3.89	3.98	4.06	4.15	4.24	4.32	4.41	4.50	4.58	4.67	4.76	4.84			
43	3.46	3.80	3.89	3.97	4.05	4.14	4.22	4.31	4.39	4.48	4.56	4.65	4.73			
44	3.38	3.71	3.80	3.88	3.96	4.04	4.13	4.21	4.29	4.38	4.46	4.54				
45	3.31	3.63	3.71	3.79	3.87	3.95	4.04	4.12	4.20	4.28	4.36					
46	3.24	3.55	3.63	3.71	3.79	3.87	3.95	4.03	4.11	4.18	4.26					
47	3.17	3.48	3.55	3.63	3.71	3.79	3.86	3.94	4.02	4.10						
48	3.10	3.40	3.48	3.56	3.63	3.71	3.78	3.86	3.93	4.01						
49	3.04	3.33	3.41	3.48	3.56	3.63	3.71	3.78	3.85							
50	2.98	3.27	3.34	3.41	3.49	3.56	3.63	3.70	3.78							
51	2.92	3.20	3.27	3.35	3.42	3.49	3.56	3.63								
52	2.86	3.14	3.21	3.28	3.35	3.42	3.49	3.56								
53	2.81	3.08	3.15	3.22	3.29	3.36	3.43									
54	2.76	3.03	3.09	3.16	3.23	3.29	3.36									
55	2.71	2.97	3.04	3.10	3.17	3.23										
56	2.66	2.92	2.98	3.05	3.11	3.18										
57	2.61	2.87	2.93	2.99	3.06											
58	2.57	2.82	2.88	2.94	3.00											
59	2.52	2.77	2.83	2.89												
60	2.48	2.72	2.78	2.84												
61	2.44	2.68	2.74													
62	2.40	2.63	2.69													

GEAR RATIO CALCULATIONS

Internal Ratio = $1.\dot{8}\dot{1}$: 1

$$\text{Final Drive Ratio (FDR)} = \frac{\text{SPUR} \times 1.\dot{8}\dot{1}}{\text{PINION}}$$

$$\text{SPUR} = \frac{\text{FDR} \times \text{PINION}}{1.\dot{8}\dot{1}}$$

$$\text{PINION} = \frac{\text{SPUR} \times 1.\dot{8}\dot{1}}{\text{FDR}}$$

NOTES

OPTION PARTS

U8777
Alloy Eccentric (+0.5mm Offset) - Mi9 (pr)

U8776
Alloy Eccentric - Mi9 (pr)

U8775
Dowel Bush (For 1.6mm Top Decks) - Mi9 (pk4)

U8762
Alloy Narrow Wheel Hex (-0.75mm) - Mi9 (pr)

U8709
Pro TC Impact Servo Saver
U8708
Alloy TC Impact Servo Saver Horn

U8772
Alloy Spring Seat - Mi9 (pk4)

U8770
K-Coat Nano Shock Body - Mi9 (pk4)

U7816
Alloy Radius Arms

U8771
Alloy Castor Pointer - Mi9 (pr)

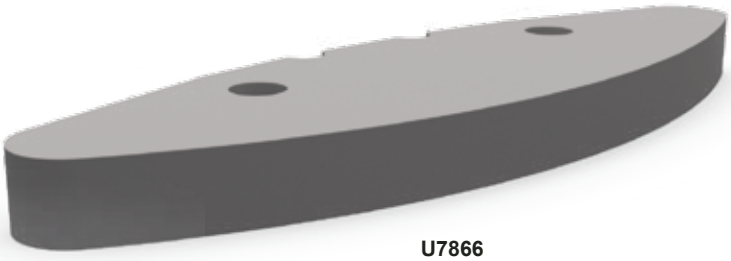

U7866
Lightweight Foam Bumper

Chassis Parts

U119 Aerial Tube - Pack 4
U4741 6mm Offset Servo Arms
U4773 Aerial Mount
U4872 Centre Track Rod Shim pk4 - Mi6/evo-Mi9
U4950 Body Posts 4pcs
U7738 Radius Arms pr - Mi7,FT,Mi8,FT8,Mi9,Vibe
U7750 LiPo Mounting Mouldings Set - Touring
U7783 Dowel Bush pk4 - Mi7,FT,Mi8,Mi9,FT9
U7790 Foam Bumper - Mi7,FT,Mi8,Mi9,Vibe
U8316 Front Bumper Mouldings - Mi8,FT8,FT9,Mi9,Neon,Vb
U8548 Yoke Pivot Bush (4pcs) - ST2, LD3
U8727 Alloy Servo Mount - Mi9
U9460 Mi10 Manual
U9462 Alloy Centre Track Rod Assy - Mi10
U9469 Front Alloy Trans Housing High (kit) - Mi10 (pr)
U9470 Rear Alloy Trans Housing High (kit) - Mi10 (pr)
U9478 Alloy Anti Roll Bar Mount - Mi10 (pr)
U9480 Anti Roll Bar Wire Collar - Mi10 (pr)
U9481 Anti Roll Bar Adjustment Spring - Mi10 (pr)
U9482 C/F Chassis - Mi10
U9488 Alloy Steering Post - Mi10 (pr)
U9489 Alloy Motor Mount - Mi10
U9490 Body Height Stopper - Mi10 (4pcs)
U9493 Alloy M3 Turnbuckle - 25mm - Grey (pr)
U9494 Alloy M3 Turnbuckle - 35mm - Grey (pr)
U9495 Alloy M3 Turnbuckle - 45mm - Grey (pr)
U9497 C/F Split Top Decks 2mm - Mi10 (pr)
U9505 C/F Rear Body Mount - Mi10
U9506 C/F Bumper Crash Stop - Mi10
U9507 C/F Front Link Mount - Mi10 (pr)
U9508 Steel 1.2mm Chassis - Mi10
U9509 C/F Rear Link Mount - Mi10 (pr)
U9512 Front Bumper Mouldings (1.2mm Chassis) - Mi10

Bodyshells & Decals

AX034 Aerox Handed Body Clips - Black (pk8)
AX035 Aerox Touring Car Body Side Stiffeners
AX118 AEROX Self Adhesive Body Washers (pk12)
MR33-RW05 MR33 Touring Rear Wing 0.5mm v2
MR33-TWS-05 MR33 Touring Car Wing Set 0.5mm (2)
MR33-TWS-05-W MR33 Touring Car Wing Set Twister & Wolverine .5mm
MR33-TWS-07 MR33 Touring Car Wing Set 0.7mm (2)
MR33-TWS-07-W MR33 Touring Car Wing Set Twister & Wolverine .7mm
MT019013 Montech Montecarlo Body - Std
MT019013L Montech Montecarlo Body - Light Weight
MT019018 Montech YSOT Body Standard
MT019018L Montech YSOT Body Light Weight
MT021001 Montech IMOLA TC Body - Standard
MT021001L Montech IMOLA TC Body - Lightweight
MT0210111 Montech Zero TC Body - Standard
MT0210111L Montech Zero TC Body - Lightweight
MT024008 Montech JULIA TC Body - Standard
MT024008L Montech JULIA TC Body - Lightweight
MT024009 Montech 1/10th COMBO Wing Set - 0.75mm
MT025013 Montech A-6R TC Body 190mm - Standard
MT025013L Montech A-6R TC Body 190mm Body - LW
U4806 Touring Car Wheel Arch Cutting Jig
U5119 Touring Car Wing + 2 End Plates - Clear
U5120 Touring Car Wing + 2 End Plates - Black
U8586 Schumacher Decal Sheet - Black - pk2
U8587 Schumacher Decal Sheet - Neon Blue - pk2
U8588 Schumacher Decal Sheet - Neon Green - pk2
U8589 Schumacher Decal Sheet - Neon Orange - pk2
U8590 Schumacher Decal Sheet - Neon Pink - pk2
U9461 Mi10 Decal
XTMTB0413-ETS Xtreme Twister - ETS TC Body
XTMTB0413-L Xtreme Twister - Light TC Body
XTMTB0413-UL Xtreme Twister - Ultra Light TC Body
XTMTB0415-ETS Xtreme Twister Speciale - ETS TC Body
XTMTB0415-L Xtreme Twister Speciale - Light TC Body
XTMTB0415-UL Xtreme Twister Speciale - Ultra Light TC Body
XTMTB0424-ETS Xtreme Red Hawk - ETS TC Body
XTMTB0424-L Xtreme Red Hawk - Light TC Body
XTMTB0424-UL Xtreme Red Hawk - Ultra Light TC Body

Suspension

U4254 Ball Grippa Sockets Pro pk8
U4903 Precision Ball Stud Ultra Short - pk4
U4904 Precision Ball Stud Short - pk4
U7833 Ball Stud Low (Short) (pk4)
U7834 Ball Stud Low (Long) (pk4)
U8235 Alloy Upper Link Pivot Rear-Mi8,FT8,FT9,Mi9 (pr)
U8740 Wheel Bearing Spacer - Mi9, FT9 (pr)
U8752 Outer Wishbone Ball Stud - Mi9,FT9 (pk4)
U8769 Wishbone Outer Socket - Mi9,FT9 (pk4)
U8783 Black Upper Link Sockets - Mi9,FT9 (4 prs)
U8784 Black 5.5mm Pivot Ball Socket - Mi9,FT9 (pk8)
U9065 Alloy Lock Stop Post (pr) - FT9
U9466 Hub Carrier - Mi10 (pr)
U9467 Steering Arm Front - Mi10
U9468 Steering Arm RL - Mi10
U9471 Front Upper Shock Mount - Mi10 (pr)
U9472 Rear Upper Shock Mount - Mi10 (pr)
U9473 Lower Shock Mount (FR RL) - Mi10 (pr)
U9474 Lower Shock Mount (FL RR) - Mi10 (pr)
U9475 Anti Roll Bar Drop Link 1.2 1.3 - Mi10 (pr)
U9476 Anti-Roll Bar Wire Set - Mi10 (pk8)
U9477 Anti Roll Bar Adjuster and Socket - Mi10 (2prs)
U9498 C/F Rear Wishbone - Mi10
U9499 C/F Front Wishbone - Mi10
U9500 Inner Wishbone Ball - Mi10 (pk4)
U9501 Alloy Upper Link Pivot Front - Mi10 (pr)
U9502 Lower Shock Ball - Mi10 (pk4)
U9513 Steering Arm RR - Mi10

Shock Absorbers

U7463 Ultra Short Shock O Ring pk4 Mi6-9,FT8,FT9Neon,Vb
U8715 Nano Shock Collar O-ring - Mi9,FT9 (pk4)
U4557 Shock Seal Cap 1pr Mi5evo,Mi7,FT8,FT9,Mi9,Neon,Vb
U7537 Ultra Short Shock Piston 4H pr Mi6-9,FT8/9,Neon,Vb
U7545 Ultra Short Shock Shims (3.3x6.7x0.05)
U7782 Ultra Short Shock Rebuild Kit
U8710 Nano Shock Diaphragm - Mi9,FT9 (pk8)
U8711 Nano Shock Top Ring - Mi9,FT9 (pr)
U8712 Nano Shock Top Socket - Mi9,FT9 (pr)
U8713 Nano Shock Shaft - Mi9,FT9 (pr)
U8714 Nano Shock Body - Mi9,FT9 (pr)
U8717 Nano Shock Spring Seat - Mi9,FT9 (pr)
U8718 Nano Lower Shock Socket - Mi9,FT9 (pk4)
U9503 Nano Alloy Grey Shock Collar - Mi10 (pr)
U9504 Alloy Shock Top Ball - Mi10 (pr)

Springs

CR840 CORE RC Hi Response TC Spring 1.9 - White
CR841 CORE RC Hi Response TC Spring 2.1 - Red
CR842 CORE RC Hi Response TC Spring 2.3 - Green
CR843 CORE RC Hi Response TC Spring 2.5 - Blue
CR844 CORE RC Hi Response TC Spring 2.6 - Black
CR845 CORE RC Hi Response TC Spring 2.7 - Orange
CR846 CORE RC Hi Response TC Spring 2.8 - Yellow
CR847 CORE RC Hi Response TC Spring 2.9 - Purple
CR848 CORE RC Hi Response TC Spring 2.2-2.9 Brown
CR849 CORE RC Hi Response TC Spring 3.1 - Grey
CR850 CORE RC Hi Response TC Spring 3.3 - Pink
CR851 CORE RC Hi Response TC Spring 3.5 - Grn/Yellow
CR852 CORE RC Hi Response TC Spring Set - Soft
CR853 CORE RC Hi Response TC Spring Set - Med
CR854 CORE RC Hi Response TC Spring Set - Hard

Transmission

AM364092	Spur Gear 64P - 92T
U7731	Layshaft Fences - Mi7,Mi8,FT8,Mi9
U7735	Diff Gears and Pin - Mi7,Mi8,FT8,Mi9
U8262	Belt 119T - Mi8,Mi9
U8720	Alloy Wheel Hex - Mi9,FT9 (pr)
U8721	Alloy Spool Hub - Mi9
U8722	Spool Pulley & Fence - Mi9
U8723	Gear Diff Rebuild Kit - Mi9,FT9
U8724	Gear Diff Mouldings - Mi9,FT9
U8725	Eccentrics - Plastic (Kit) - Mi9,FT9 (pr)
U8726	Diff Output Shaft - Mi9,FT9 (pr)
U8733	Driveshaft Yoke Outer - Mi9,FT9
U8734	Front Driveshaft Cage - Mi9,FT9
U8735	Driveshaft Spring Clip - Mi9,FT9 (pr)
U8736	Driveshaft Pin Outer - Mi9,FT9 (pr)
U8737	Driveshaft Yoke Inner - Mi9,FT9 each
U8741	Rear Axle - Mi9
U8742	Rear Driveshaft Bone - Mi9
U8748	Diff/Spool Float Shim 6x7.7x0.1mm - Mi9,FT9, (pk4)
U8749	Diff Output - Mi9,FT9 (pr)
U8750	Spool Output - Mi9 (pr)
U8789	Gear Diff Set - Mi9,FT9
U8929	Driveshaft E-Clip V2 - Mi9,FT9 (pk10)
U9491	Layshaft Pulley - Mi10
U9492	Spur Gear Screw - Mi10 (pk3)
U9547	Matched Front Driveshaft Bone & Axle - Mi9/10,FT9

Pinions

CR6456	Pinion Gear 64DP 56T (7075 Hard)
CR6457	Pinion Gear 64DP 57T (7075 Hard)
CR6458	Pinion Gear 64DP 58T (7075 Hard)
CR6459	Pinion Gear 64DP 59T (7075 Hard)
CR6460	Pinion Gear 64DP 60T (7075 Hard)
CR6461	Pinion Gear 64DP 61T (7075 Hard)
CR6462	Pinion Gear 64DP 62T (7075 Hard)
U3414	Pinion; Hard Alloy 48dp - 14T
U3415	Pinion; Hard Alloy 48dp - 15T
U3416	Pinion; Hard Alloy 48dp - 16T
U3417	Pinion; Hard Alloy 48dp - 17T
U3418	Pinion; Hard Alloy 48dp - 18T
U3419	Pinion; Hard Alloy 48dp - 19T
U3420	Pinion; Hard Alloy 48dp - 20T
U3421	Pinion; Hard Alloy 48dp - 21T
U3422	Pinion; Hard Alloy 48dp - 22T
U3423	Pinion; Hard Alloy 48dp - 23T
U3424	Pinion; Hard Alloy 48dp - 24T
U3425	Pinion; Hard Alloy 48dp - 25T
U3426	Pinion; Hard Alloy 48dp - 26T
U3427	Pinion; Hard Alloy 48dp - 27T
U3428	Pinion; Hard Alloy 48dp - 28T
U3429	Pinion; Hard Alloy 48dp - 29T
U3430	Pinion; Hard Alloy 48dp - 30T
U3431	Pinion; Hard Alloy 48dp - 31T
U3432	Pinion; Hard Alloy 48dp - 32T
U3433	Pinion; Hard Alloy 48dp - 33T
U3434	Pinion; Hard Alloy 48dp - 34T
U3435	Pinion; Hard Alloy 48dp - 35T
U3436	Pinion; Hard Alloy 48dp - 36T
U3437	Pinion; Hard Alloy 48dp - 37T
U3438	Pinion; Hard Alloy 48dp - 38T
U3439	Pinion; Hard alloy 48dp - 39T
U3440	Pinion; Hard Alloy 48dp - 40T
U3621	Pinion; Hard Alloy 64dp - 21T
U3622	Pinion; Hard Alloy 64dp - 22T
U3623	Pinion; Hard Alloy 64dp - 23T
U3624	Pinion; Hard Alloy 64dp - 24T
U3625	Pinion; Hard Alloy 64dp - 25T
U3626	Pinion; Hard Alloy 64dp - 26T
U3627	Pinion; Hard Alloy 64dp - 27T
U3628	Pinion; Hard Alloy 64dp - 28T
U3629	Pinion; Hard Alloy 64dp - 29T
U3630	Pinion; Hard Alloy 64dp - 30T
U3631	Pinion; Hard Alloy 64dp - 31T
U3632	Pinion; Hard Alloy 64dp - 32T
U3633	Pinion; Hard Alloy 64dp - 33T
U3634	Pinion; Hard Alloy 64dp - 34T
U3635	Pinion; Hard Alloy 64dp - 35T
U3636	Pinion; Hard Alloy 64dp - 36T
U3637	Pinion; Hard Alloy 64dp - 37T
U3638	Pinion; Hard Alloy 64dp - 38T
U3639	Pinion; Hard Alloy 64dp - 39T
U3640	Pinion; Hard Alloy 64dp - 40T
U3641	Pinion; Hard Alloy 64dp - 41T
U3642	Pinion; Hard Alloy 64dp - 42T
U3643	Pinion; Hard Alloy 64dp - 43T
U3644	Pinion; Hard Alloy 64dp - 44T
U3645	Pinion; Hard Alloy 64dp - 45T
U3646	Pinion; Hard Alloy 64dp - 46T
U3647	Pinion; Hard Alloy 64dp - 47T
U3648	Pinion; Hard Alloy 64dp - 48T
U3649	Pinion; Hard Alloy 64dp - 49T
U3650	Pinion; Hard Alloy 64dp - 50T
U3651	Pinion; Hard Alloy 64dp - 51T
U3652	Pinion; Hard Alloy 64dp - 52T
U3653	Pinion; Hard Alloy 64dp - 53T
U3654	Pinion; Hard Alloy 64dp - 54T
U3655	Pinion; Hard Alloy 64dp - 55T
U4441	Pinion; Hard Alloy 48dp - 41T
U4442	Pinion; Hard Alloy 48dp - 42T
U4443	Pinion; Hard Alloy 48dp - 43T
U4444	Pinion; Hard Alloy 48dp - 44T
U4445	Pinion; Hard Alloy 48dp - 45T

Hardware

U8759	Steel Spanner 3.9/5.5mm - Mi9,FT9
CR801	CORE RC Double Sided Tape Pads 25mmx20mm - pk24
CR879	CORE RC - Serrated M4 Steel Black Wheel Nut pk4
U1548	SPEED PACK - M3 Washers
U1633	SPEED PACK - Small Pins (pk)
U1960	SPEED PACK - O Rings; Various
U2128	SPEED PACK - Grub-Set Screws M3 M4
U3021	SPEED PACK - M3x6 Csk Hd - (pk10)
U3022	SPEED PACK - M3x8 Csk Hd - (pk10)
U3023	SPEED PACK - M3x10 Csk Hd - (pk10)
U3024	SPEED PACK - M3x12 Csk - M3 x 10 Button Screws
U3131	SPEED PACK Alloy Spacers M3x7mm 0.5;1;2mm (pk18)
U4112	S/Steel Shims 1/4x5/16x0.004
U4155	SPEED PACK - M3 Csk Washers - Black Alloy (pk10)
U4210	SPEED PACK - Pinion Grub Screw Set pk10
U4662	SPEED PACK - M3x4 Grub Screw - Cone Point (10pcs)
U4835	SPEED PACK - M3 Steel Nut Black (pk8)
U4836	SPEED PACK Grub Screw M3 x 8mm Cup Point (10pcs)
U4862	M3 Black Alloy Washers 0.5mm (pk12)
U4987	SPEED PACK Needle Roller 1.5x11.8 (pk8)
U7102	SPEED PACK - M3x4 Button Hd (pk10)
U7103	SPEED PACK - M3x6 Button Hd (pk10)
U7104	SPEED PACK - M3x8 Button Hd (pk10)
U7105	SPEED PACK - M3x10 Button Hd (pk10)
U7106	SPEED PACK - M3x12 Button Hd (pk10)
U7107	SPEED PACK - M3x16 Button Hd (pk10)
U7112	SPEED PACK - M3x8 Cap Hd (pk10)
U7538	SPEED PACK M2x6 CSK pk 10
U7611	SPEED PACK - M3x14 Button Hd (pk10)
U7677	SPEED PACK - M2.5x8 Csk Hd (pk10)
U7689	M3 Brass Inserts - pk10
U7710	M3 Black Alloy Washers 1.00mm (pk10)
U7711	M3 Black Alloy Washers 2.00mm (pk10)
U7712	M3 Black Alloy Washers 3.00mm (pk10)
U7751	M3x8 Grub Screw Dome End (pk4)
U8168	5 x 1 `O`ring (pk10)
U8324	SPEED PACK M2x8 Csk Hd (pk10)
U8792	3.5 x 1 'O' ring (pk10) - Mi9,FT9
U8794	M3 Brass Black Thread Inserts - pk10

Hardware Cont.

U8801 SPEED PACK - M3x5 Button Hd (pk10)
U8930 SPEED PACK M2 x 4 Button Hd -1.5 Hex (pk 10)
U9030 Steering Spacer 4.05 x 5.65 x 1mm (pr) - Eclipse 6
U9457 M1.6x6 Cap Hd Screws (1.5 Hex) (pk10)
U9458 M2.6x12 Button Hd Screws (2.0 Hex) (pk10)
U9459 M2x5 Csk Hd Screws (1.5 Hex) (pk10)
U9483 M3 Alloy Washers Grey 1.0mm (pk10)
U9496 Alloy Grey Wishbone Spacer 1.0mm - Mi10 (pk8)

Bearings & Balls

U1411 Ball Bearing - 4x8x3 Shield - (pr)
U3136 Ball Bearing - 5x8x2.5 - Shield (pr)
U8790 Ball Bearing 6x10x3 Yellow Shield - pr
U8798 Ball Bearing 1.5x4x2 Shield - pr
U9456 Ball Bearing 6x10x3 Flanged Yellow Shield - pr

Option Parts

AM348069 Spur Gear 48P - 69T
AM348070 Spur Gear 48P - 70T
AM348071 Spur Gear 48P - 71T
AM348072 Spur Gear 48P - 72T
AM348073 Spur Gear 48P - 73T
AM348074 Spur Gear 48P - 74T
AM348075 Spur Gear 48P - 75T
AM348078 Spur Gear 48P - 78T
AM348081 Spur Gear 48P - 81T
AM348082 Spur Gear 48P - 82T
AM348083 Spur Gear 48P - 83T
AM348084 Spur Gear 48P - 84T
AM348086 Spur Gear 48P - 86T
AM348087 Spur Gear 48P - 87T
AM364094 Spur Gear 64P - 94T
AM364096 Spur Gear 64P - 96T
AM364098 Spur Gear 64P - 98T
AM364100 Spur Gear 64P - 100T
AM364102 Spur Gear 64P - 102T
AM364104 Spur Gear 64P - 104T
AM364106 Spur Gear 64P - 106T
AM364108 Spur Gear 64P - 108T
AM364110 Spur Gear 64P - 110T
AM364112 Spur Gear 64P - 112T
AM364114 Spur Gear 64P - 114T
AM364116 Spur Gear 64P - 116T
U9075 Pro CNC Spur Gear 112T 64dp - Mi8,Mi9
U9076 Pro CNC Spur Gear 113T 64dp - Mi8,Mi9
U9077 Pro CNC Spur Gear 114T 64dp - Mi8,Mi9
U9396 Pro CNC Stock Spur Gear 98T 64dp - Mi8,FT8/9,Mi9
U9397 Pro CNC Stock Spur Gear 104T 64dp - Mi8,FT8/9,Mi9
U9398 Pro CNC Stock Spur Gear 108T 64dp - Mi8,FT8/9,Mi9
U9399 Pro CNC Stock Spur Gear 92T 64dp - Mi8,FT8/9,Mi9
AM030106 Alloy Servo Horn 23T BG
AM030107 Alloy Servo Horn 25T BG
AX030 Aerox On-Road Alloy Servo Arm - Offset 23T Sanwa
AX031 Aerox On-Road Alloy Servo Arm - Offset 25T Futaba
AX097 AEROX Digital Castor Gauge - Mi9
AX124 AEROX Pro Chassis Tape - Ultra Low Friction
CR280 CORE RC Ti Pro Ball Studs - Short - (pr)
CR304 Titanium Wheel Nuts M4 - pk4
CR310 Alloy Csk Hex Screws M3 x 6 pk10
CR311 Alloy Csk Hex Screws M3 x 8 pk10
CR312 Alloy Csk Hex Screws M3 x 10 pk10
CR313 Alloy Csk Hex Screws M3 x 12 pk10
CR314 Alloy Button Head Hex Screws M3 x 6 pk10
CR315 Alloy Button Head Hex Screws M3 x 8 pk10
CR316 Alloy Button Head Hex Screws M3 x 10 pk10
CR317 Alloy Button Head Hex Screws M3 x 12 pk10
CR466 Alloy Offset Servo Arm 25T - Futaba
CR664 CORE RC Alloy Motor Spacer - 1mm - pk2
CR723 Threaded Steel 10g Weight 17.60mm (pk4)
CR868 CORE RC Threaded Square 5g Weight - (pk4)
CR869 CORE RC Threaded Rectangular 7.5g Weight - (pk4)
CR904 CORE RC M3 Thread Repair Kit (pk10)
U3582 Precision Balance Pivot Set
U4235 M3 x 8mm Alloy Csk Screws pk10
U4328 Impact Servo Saver 23T/25T
U4329 Impact Servo Saver Mouldings
U4330 Impact Servo Saver Springs
U7400 Titanium Low Profile M4 Serrated Nut (pk4)
U7536 Ultra Short Shock Piston 3H pr - Mi6/evo-Mi9,FT9
U7816 Alloy Radius Arms - Mi7,Mi8,Mi9 (pr)
U7827 Alloy LiPo Mount pr - Touring
U7828 Titanium Ball Stud Low (Ultra Short) (pk4)
U7839 C/F LiPo Swivel pr - Mi7-Mi9,FT,FT8/9,LD3,ST2,Neon
U7866 Lightweight Foam Bumper V2 - Mi7,Mi8,Mi9
U8065 M3 Alloy Thread Insert pk8
U8323 C/F Lipo Hook pr - Mi8,FT8,Mi9,Neon,Vibe
U8333 Wheel Hex Spacers 0.25, 0.5, 0.75mm - (pk12)
U8334 Alloy LiPo Swivel - (pr)
U8708 Alloy TC Impact Servo Saver Horn
U8762 Alloy Narrow Wheel Hex (-0.75mm) - Mi9,FT9 (pr)
U8770 K-Coat Nano Shock Body - Mi9,FT9 (pk4)
U8771 Alloy Castor Pointer - Mi9,FT9 (pr)
U8772 Alloy Spring Seat - Mi9 (pk4)
U8773 Brass Circular Weight 5g (pk4)
U8774 Brass Circular Weight 10g (pk4)
U8775 Dowel Bush (For 1.6mm Top Decks) - Mi9 (pk3)
U8776 Alloy Eccentric (Kit Spec) - Mi9,FT9 (pr)
U8777 Alloy Eccentric (+0.5mm Offset) - Mi9,FT9 (pr)
U8782 Ti Lower Shock Ball 5mm (2mm Hex) - Mi9,FT9 (pk4)
U8799 Pro Ball Bearing 6x10x3 - pr
U8816 Motor Mount Weight 25g V2 - Mi9
U8823 Hexagon 3D Flex Bumper Mi7,Mi8,Mi9
U8912 C/F Rear Top Deck Brace - Mi9
U8988 C/F Short LiPo Swivel (pr)
U9008 Brass LiPo Hook (pr) - Mi8,Mi9,Vibe
U9033 20g Brass Front Weight - Mi9
U9137 Pro Ball Bearing - 6x10x3 Flanged (pr)
U9350 C/F 1 Piece Top Deck - TITC - Mi9
U9479 M3 Alloy Washers Grey 0.5mm (pk10)
U9514 M3 Alloy Washers Grey 2.0mm (pk10)
U9515 Anti Roll Bar Drop Link 1.1 1.4 - Mi10 (pr)
U9516 Alloy Fan Mount - Mi10
U9517 Alloy Grey Wishbone Spacer 0.5mm - Mi10 (pk8)
U9518 Alloy Grey Wishbone Spacer 2.0mm - Mi10 (pk8)
U9521 Alloy Chassis - Mi10
U9522 Front Alloy Trans Housing Low (-2mm) - Mi10 (pr)
U9523 Rear Alloy Trans Housing Low (-2mm) - Mi10 (pr)
U9524 Rear Driveshaft Bone Blade Spec - Mi10
U9525 Matched Front Driveshaft Bone (Blade) & Axle- Mi10
U9526 Spool Output Blade Type - Mi10 (pr)
U9527 Diff Output Blade Type - Mi10 (pr)
U9528 Matched Front Driveshaft Bone (+2mm) & Axle - Mi10
U9529 Rear Driveshaft Bone +2mm - Mi10
U9530 Rear Axle +2mm - Mi10
U9542 C/F Split Top Decks 1.6mm - Mi10 (pr)
U9543 C/F 1 Notch Front Link Mount - Mi10 (pr)
U9544 C/F 1 Notch Rear Link Mount - Mi10 (pr)
U9545 C/F Upper Rear Body Mount - Mi10
U9548 C/F Outboard Front Shocks Conversion (pr) - Mi10
U9549 C/F Outboard Front Wishbone - Mi10
U9550 C/F 1 Piece Topdeck 2mm (2.0 C24) - Mi10
U9551 Steel Chassis Lower Screw Set - Mi10
U9552 C/F Chassis Lower Screw Set - Mi10
U9553 C/F 2 Notch Front Link Mount - Mi10 (pr)
U9554 C/F 2 Notch Rear Link Mount - Mi10 (pr)
U9555 Rear Body Mount System - Twister Type -Mi10 (pr)
U9556 Rear Body Mount System - Wolverine Type -Mi10 (pr)
U9557 Titanium Upper Screw Set - Mi10

Wheels

U2500 Rev-Lite; 24mm - White (Pk4)
U2777 Rev-Lite; Flex 24mm - White (Pk4)
U3792 Rev-Lite wheel Std; 20mm - White (Pk4)

SET UP SHEET

Mi10 — Schumacher

Driver: Michal Orlowski	Track: Rc Addict	Event: TITC 26	
Date: 02/26	Qualifying: P1	Final: P1	Best Lap: 13.8

TRACK TYPE

Grip Level	High ■ Medium ☐ Low ☐
Type	Tight ☐ Open ■ Mixed ☐
Condition	Flat ☐ Bumpy ■ Mixed ☐
Surface	Tarmac (Asphalt) ■ Carpet ☐
Track Temp	25 °C
Weather	

Notes:

TYRES

Side Wall Glue Height Ø	mm		
Tyres	Sweep D40		
Cleaner	Mighty Yellow		
Additive	Mighty Yellow	Wet on track ☐	
Additive Time	Front: 15 mins	Rear: 15 mins	
Heating Time	Front: 15 mins	Rear: 15 mins	
Heating Temp	Front: 80 °C	Rear: 80 °C	

Notes:

FRONT

KEY: **CF** = Carbon Fibre, **AL** = Aluminium, **P** = Plastic, **ST** = Steel
F = Front, **R** = Rear

Ride Height	4.8 mm
Camber	1.0 deg
Droop	23.6 mm
Castor	4.0 deg
Toe	-1.0 deg
Anti Roll Bar	1.1 ☐ 1.2 ☐ 1.3 ☐ 1.4 ■
Upper Link Mount	0 Notch ■ 1 Notch ☐ 2 Notch ☐
Spool Height	↑ ■ ↓ ☐ U8777 +0.5mm Alloy Eccentric ■ U9523 Low Trans Housing ☐
Servo Horn Height	17 mm Saver ☐
Steering Travel	24 in out
Shock Mount Position	Inboard ■ Outboard ☐

Notes:

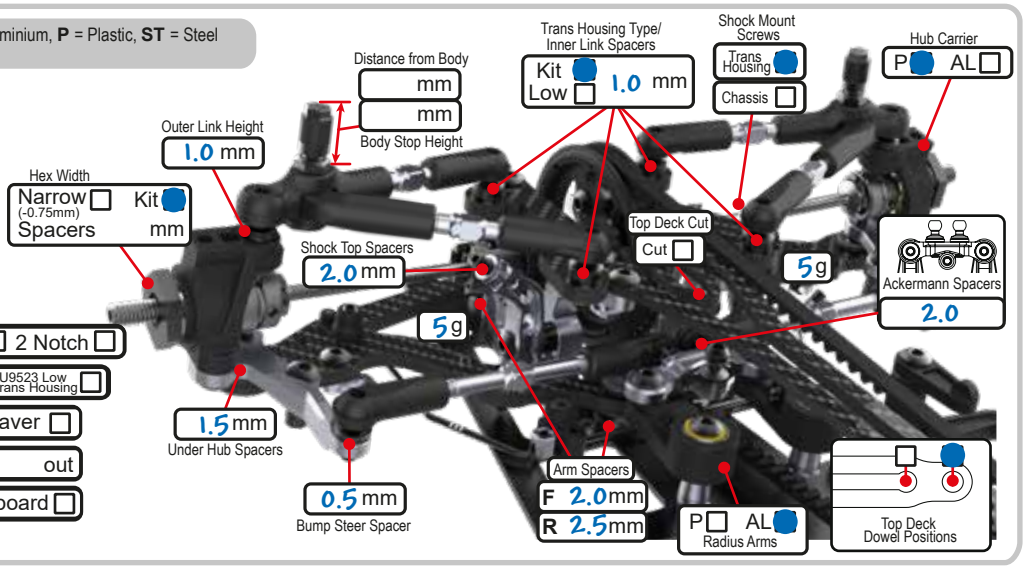

REAR

KEY: **CF** = Carbon Fibre, **AL** = Aluminium, **P** = Plastic, **ST** = Steel
F = Front, **R** = Rear

Ride Height	5.4 mm
Camber	1.5 deg
Droop	22.6 mm
Castor	1.5 deg
Toe	3.0 deg
Anti Roll Bar	1.1 ☐ 1.2 ☐ 1.3 ☐ 1.4 ■
Upper Link Mount	0 Notch ■ 1 Notch ☐ 2 Notch ☐
Diff Height	↑ ■ ↓ ☐ U8777 +0.5mm Alloy Eccentric ■ U9522 Low Trans Housing ☐
Diff Setting	10000 cSt Diff Checker # 190 Warming ■ Duration: 1 min

Notes:

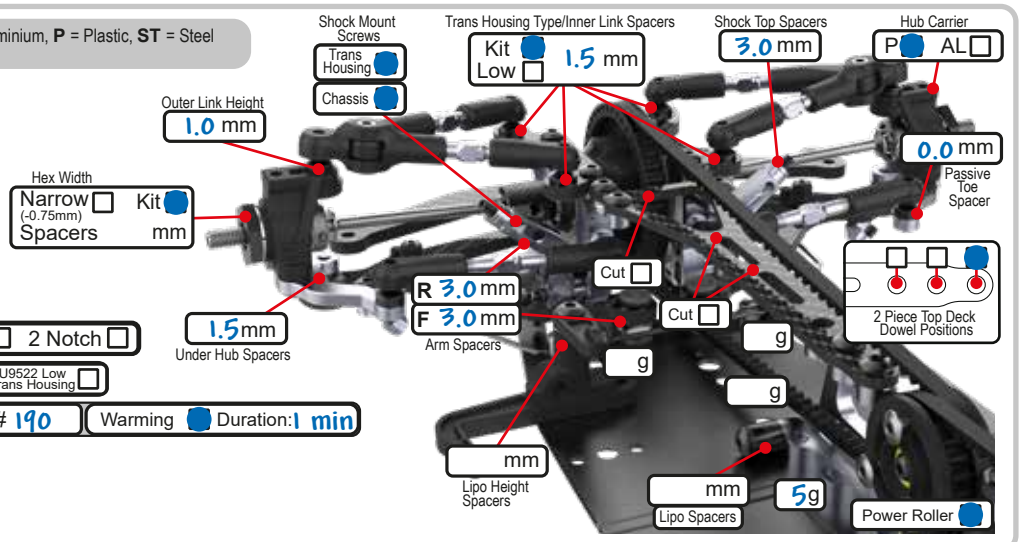

BODYSHELL

Body	Speciale	
Wing	Twister	End Plates ■
Wing Height	116 mm	
Splitter Height	7.0 mm	
Body Weight	65 g	
Body Offset Fwrd	66 mm	
Front Post	1dot ☐ 2dot ☐ 3dot ■ Pin Hole 123456	5
Rear Post	1dot ☐ 2dot ☐ 3dot ☐ Pin Hole 123456	
Type:		

Notes:

CHASSIS

Chassis	
ST ■ CF ☐ AL ☐	
Top Deck Options	1 Pc TITC U9550 ■
Front 2 Piece	C/F 1.6 ☐ C/F 2.0 ☐
Rear 2 Piece	C/F 1.6 ☐ C/F 2.0 ☐
Motor Mount Screws	R ☐ ■ ■ ☐ F
PTFE Tape	☐
Total Weight	1305 g
Weight Distribution	50% 50g - Rear

ELECTRONICS

E.S.C.	Elceram Nitride	+ g
Servo	Power HD GTS 2S	
RX	Sanwa	+ 15 g
LiPo	Cayote 6300	+ g
Motor	4.5T	Spacers mm
Rotor Dia.	12.3 mm	
Timing	35 deg	
Gear Pitch	48 ■ 64 ☐	
Pinion	19 t	
Spur	69 t	
Ratio	6.6	

SHOCKS

KEY: **x** = Stroke, **e** = external

	FRONT	REAR
Spring	2.6-2.9	2.8
Oil	450 cSt	450 cSt
Piston	Kit ■	Kit ■
Length (x)	8.0 mm	8.0 mm
Rebound	0.0 mm	0.0 mm
Limiters (e)	0.0 mm	0.0 mm
Body	Kit ☐ K-Coat U8770 ■	

Notes:

SET UP SHEET

Mi10 — Schumacher

Driver: Elliott Harper	Track: EWS	Event: Round 5	
Date: 08/03/2026	Qualifying: P1	Final: P1	Best Lap: 12.80

TRACK TYPE

Grip Level	High ☐ Medium ■ Low ☐
Type	Tight ☐ Open ☐ Mixed ■
Condition	Flat ☐ Bumpy ☐ Mixed ■
Surface	Tarmac (Asphalt) ☐ Carpet ■
Track Temp	°C
Weather	

Notes:

TYRES

Side Wall Glue Height Ø	58 mm		
Tyres	Rush 30		
Cleaner	CR999		
Additive	MR33 V5	Wet on track ■	
Additive Time	Front: 10 mins	Rear: 10 mins	
Heating Time	Front: N/A mins	Rear: N/A mins	
Heating Temp	Front: °C	Rear: °C	

Notes:

FRONT

KEY: **CF** = Carbon Fibre, **AL** = Aluminium, **P** = Plastic, **ST** = Steel
F = Front, **R** = Rear

Ride Height	5.0 mm
Camber	1.5 deg
Droop	23.6 mm
Castor	4.0 deg
Toe	1.5 deg
Anti Roll Bar	1.1 ☐ 1.2 ☐ 1.3 ■ 1.4 ☐
Upper Link Mount	0 Notch ■ 1 Notch ☐ 2 Notch ☐
Spool Height	↑ ■ ↓ ☐ U8777 +0.5mm Alloy Eccentric ☐ U9523 Low Trans Housing ☐
Servo Horn Height	17 mm Saver ☐
Steering Travel	24 in out
Shock Mount Position	Inboard ■ Outboard ☐

Notes:

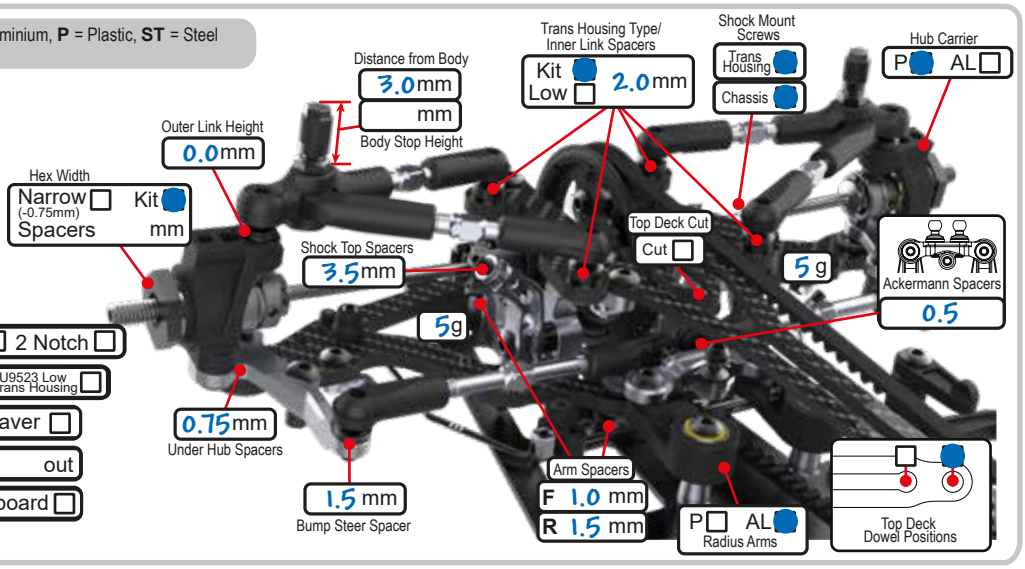

REAR

KEY: **CF** = Carbon Fibre, **AL** = Aluminium, **P** = Plastic, **ST** = Steel
F = Front, **R** = Rear

Ride Height	5.2 mm
Camber	1.75 deg
Droop	22.4 mm
Castor	1.5 deg
Toe	3.0 deg
Anti Roll Bar	1.1 ☐ 1.2 ☐ 1.3 ■ 1.4 ☐
Upper Link Mount	0 Notch ■ 1 Notch ☐ 2 Notch ☐
Diff Height	↑ ■ ↓ ☐ U8777 +0.5mm Alloy Eccentric ☐ U9522 Low Trans Housing ☐
Diff Setting	6000 cSt Diff Checker # Warming ■ Duration:

Notes:

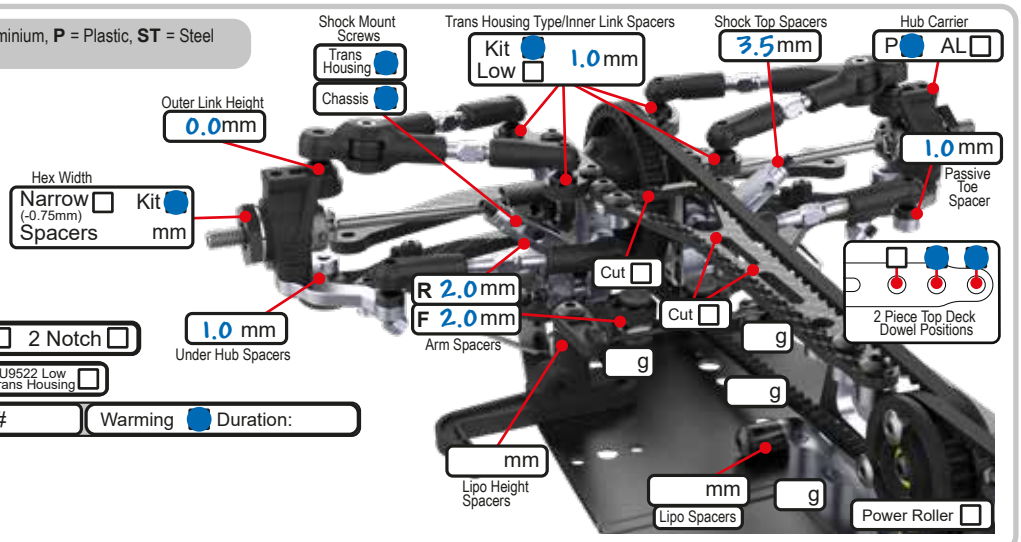

BODYSHELL

Body	Speciale
Wing	MR33
Wing Height	66 mm
End Plates	■
Splitter Height	7 mm
Body Weight	g
Body Offset Fwrd	mm
Front Post	1dot ☐ 2dot ☐ 3dot ☐ Pin Hole 123456 ☐
Rear Post	1dot ☐ 2dot ☐ 3dot ☐ Pin Hole 123456 ☐
Type:	

Notes:

CHASSIS

Chassis	
ST ■ CF ☐ AL ☐	
Top Deck Options	1 Pc TITC U9550 ☐
Front 2 Piece	C/F 1.6 ☐ C/F 2.0 ■
Rear 2 Piece	C/F 1.6 ☐ C/F 2.0 ■
Motor Mount Screws	R ■ ■ ■ ☐ F
PTFE Tape	■
Total Weight	1312 g
Weight Distribution	50 % 50 g - Rear

ELECTRONICS

E.S.C.	HW G3	+ g
Servo	Aerox LP2S	
RX	Sanwa	+ g
LiPo	Aerox 4600	+ g
Motor	HW 5T	Spacers mm
Rotor Dia.	12.3 mm	
Timing	30 deg	
Gear Pitch	48 ■ 64 ☐	
Pinion	17 t	
Spur	69 t	
Ratio	7.37	

SHOCKS

KEY: **x** = Stroke, **e** = external

	FRONT	REAR
Spring	2.5-2.8	2.7
Oil	400 cSt	400 cSt
Piston	Kit ■	Kit ■
Length (x)	8 mm	8 mm
Rebound	mm	mm
Limiters (e)	mm	mm
Body	Kit ■ K-Coat U8770 ☐	

Notes:

SET UP SHEET

Schumacher

Driver: Fin Whitelock	Track: Stafford	Event: Club Race	
Date: 04/26	Qualifying:	Final:	Best Lap:

TRACK TYPE

Grip Level	High ☐ Medium ☐ Low ■
Type	Tight ☐ Open ☐ Mixed ■
Condition	Flat ☐ Bumpy ☐ Mixed ■
Surface	Tarmac (Asphalt) ■ Carpet ☐
Track Temp	°C
Weather	Overcast

Notes:

TYRES

Side Wall Glue Height Ø	mm		
Tyres	JR-36RYBRCA26		
Cleaner	CR999		
Additive	MR33 V3	Wet on track ☐	
Additive Time	Front: 15 mins	Rear: 15 mins	
Heating Time	Front: 15 mins	Rear: 15 mins	
Heating Temp	Front: 80 °C	Rear: 80 °C	

Notes:

FRONT

KEY: **CF** = Carbon Fibre, **AL** = Aluminium, **P** = Plastic, **ST** = Steel
F = Front, **R** = Rear

Ride Height	5.2 mm
Camber	2.0 deg
Droop	23.4 mm
Castor	4.0 deg
Toe	-1.0 deg
Anti Roll Bar	1.1 ☐ 1.2 ☐ 1.3 ■ 1.4 ☐
Upper Link Mount	0 Notch ■ 1 Notch ☐ 2 Notch ☐
Spool Height	↑ ☐ ↓ ■ U8777 +0.5mm Alloy Eccentric ☐ U9523 Low Trans Housing ☐
Servo Horn Height	17 mm Saver ☐
Steering Travel	25 in out
Shock Mount Position	Inboard ■ Outboard ☐

Notes:

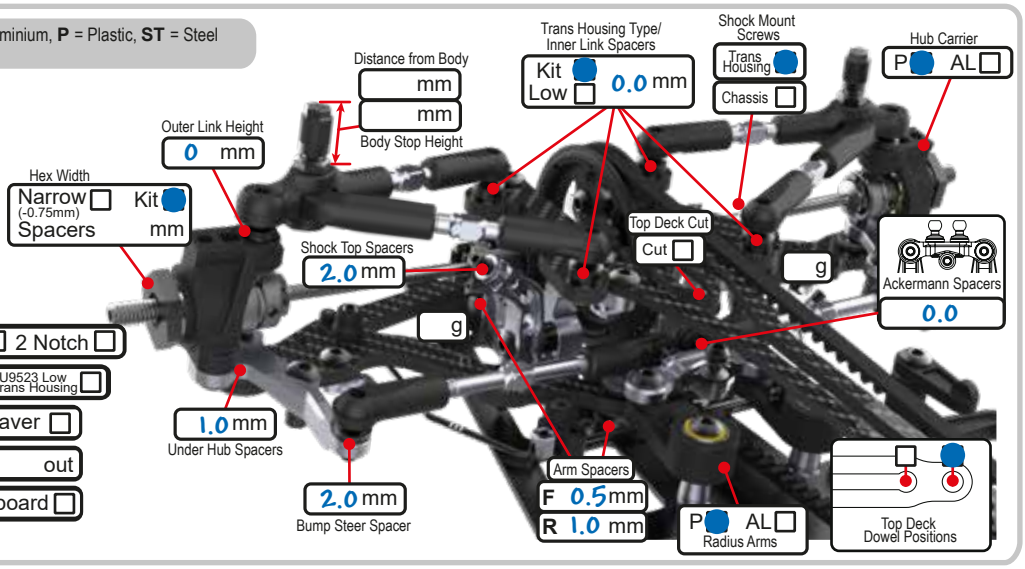

REAR

KEY: **CF** = Carbon Fibre, **AL** = Aluminium, **P** = Plastic, **ST** = Steel
F = Front, **R** = Rear

Ride Height	5.6 mm
Camber	2.0 deg
Droop	22.2 mm
Castor	2.0 deg
Toe	3.0 deg
Anti Roll Bar	1.1 ☐ 1.2 ■ 1.3 ☐ 1.4 ☐
Upper Link Mount	0 Notch ■ 1 Notch ☐ 2 Notch ☐
Diff Height	↑ ☐ ↓ ■ U8777 +0.5mm Alloy Eccentric ☐ U9522 Low Trans Housing ☐
Diff Setting	4000 cSt Diff Checker # 165 Warming ■ Duration: 1 min

Notes:

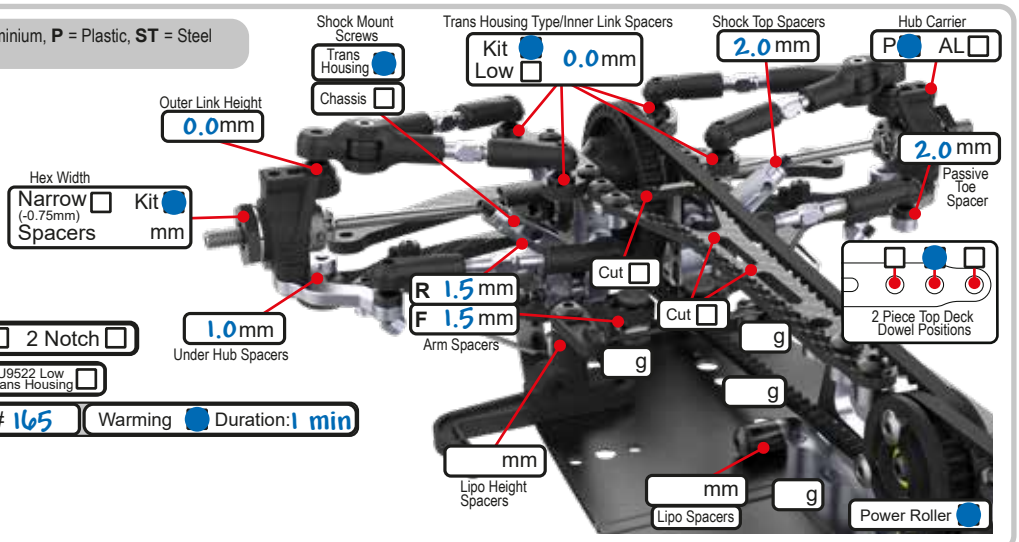

BODYSHELL

Body	Speciale	
Wing	Twister	End Plates ■
Wing Height	117 mm	
Splitter Height	7.0 mm	
Body Weight	65 g	
Body Offset Fwrd	67 mm	
Front Post	1dot ☐ 2dot ☐ 3dot ■ Pin Hole 123456	5
Rear Post	1dot ☐ 2dot ☐ 3dot ☐ Pin Hole 123456	
Type:		

Notes:

CHASSIS

Chassis	
ST ☐ CF ■ AL ☐	
Top Deck Options	
1 Pc TITC U9550 ☐	
Front 2 Piece	Rear 2 Piece
C/F 1.6 ☐	C/F 1.6 ☐
C/F 2.0 ■	C/F 2.0 ■
Motor Mount Screws	R ■ ■ ■ ☐ F
PTFE Tape ☐	Total Weight 1305 g
Weight Distribution	50% 50g - Rear

ELECTRONICS

E.S.C.	Hobbywing G3X	+ 20 g
Servo	Aerox LP2	
RX	Sanwa	+ 15 g
LiPo	Aerox 6500	+ g
Motor	HW G5 17.5T	Spacers mm
Rotor Dia.	Hi T	mm
Timing	43	deg
Gear Pitch	48 ☐ 64 ■	
Pinion	41	t
Spur	82	t
Ratio	3.63	

SHOCKS

KEY: **x** = Stroke, **e** = external

	FRONT	REAR
Spring	2.9 Core-rc	3.1 Core-rc
Oil	400 cSt	400 cSt
Piston	Kit ■	Kit ■
Length (x)	8.0 mm	8.0 mm
Rebound	0.0 mm	0.0 mm
Limiters (e)	0.0 mm	0.0 mm
Body	Kit ■ K-Coat U8770 ☐	

Notes:

SET UP SHEET

Schumacher

Driver: Elliott Harper	Track: Cotswold	Event: Testing	
Date: 04/26	Qualifying:	Final:	Best Lap:

TRACK TYPE

Grip Level	High ☐ Medium ■ Low ☐
Type	Tight ☐ Open ☐ Mixed ■
Condition	Flat ■ Bumpy ☐ Mixed ☐
Surface	Tarmac (Asphalt) ■ Carpet ☐
Track Temp	°C
Weather	Cold

Notes:

TYRES

Side Wall Glue Height Ø	mm		
Tyres	JR-36RYBRCA26		
Cleaner	Core-RC 999		
Additive	MR33 V3	Wet on track ☐	
Additive Time	Front: 15 mins	Rear: 15 mins	
Heating Time	Front: mins	Rear: mins	
Heating Temp	Front: °C	Rear: °C	

Notes:

FRONT

KEY: **CF** = Carbon Fibre, **AL** = Aluminium, **P** = Plastic, **ST** = Steel
F = Front, **R** = Rear

Ride Height	5.0 mm
Camber	2.0 deg
Droop	23.6 mm
Castor	4.0 deg
Toe	-1.0 deg
Anti Roll Bar	1.1 ☐ 1.2 ☐ 1.3 ■ 1.4 ☐
Upper Link Mount	0 Notch ■ 1 Notch ☐ 2 Notch ☐
Spool Height	↑ ■ ↓ ☐ U8777 +0.5mm Alloy Eccentric ☐ U9523 Low Trans Housing ☐
Servo Horn Height	17 mm Saver ☐
Steering Travel	25 in 16 out
Shock Mount Position	Inboard ■ Outboard ☐

Notes:

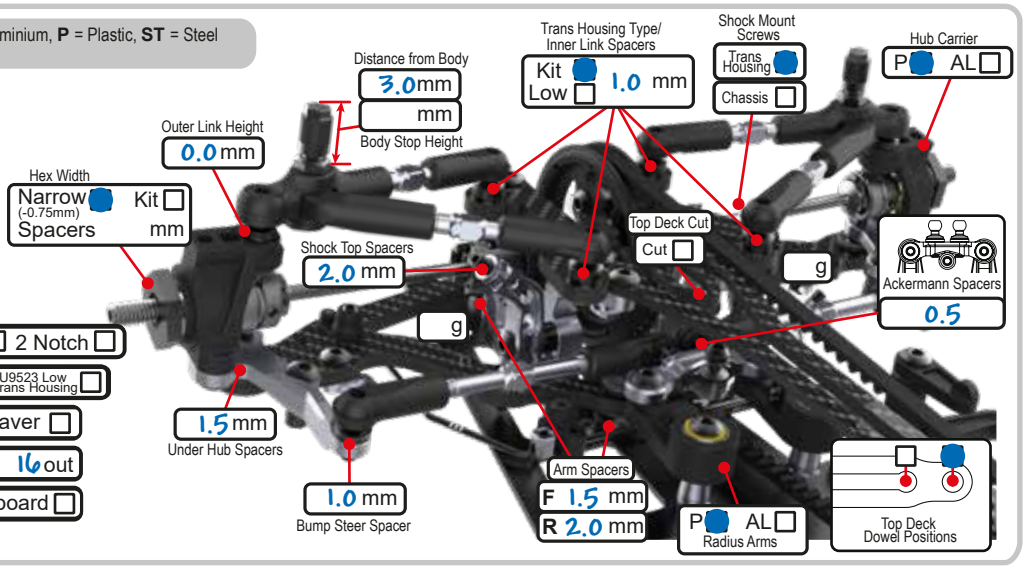

REAR

KEY: **CF** = Carbon Fibre, **AL** = Aluminium, **P** = Plastic, **ST** = Steel
F = Front, **R** = Rear

Ride Height	5.4 mm
Camber	2.0 deg
Droop	22.4 mm
Castor	2.0 deg
Toe	3.0 deg
Anti Roll Bar	1.1 ☐ 1.2 ☐ 1.3 ■ 1.4 ☐
Upper Link Mount	0 Notch ■ 1 Notch ☐ 2 Notch ☐
Diff Height	↑ ■ ↓ ☐ U8777 +0.5mm Alloy Eccentric ☐ U9522 Low Trans Housing ☐
Diff Setting	4000 cSt Diff Checker # 175 Warming ■ Duration: 1

Notes:

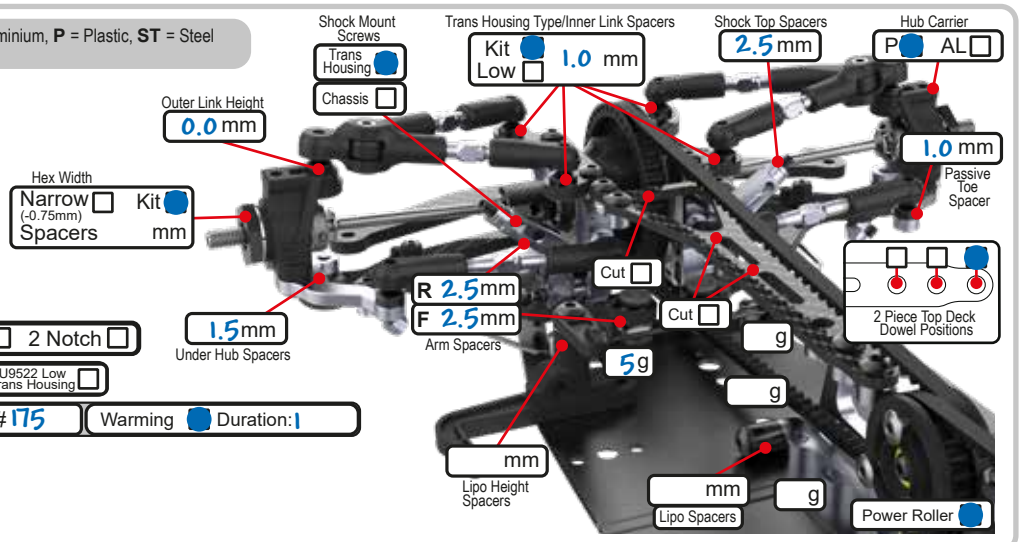

BODYSHELL

Body	Speciale	
Wing	MR33	End Plates ■
Wing Height	66 mm	
Splitter Height	7 mm	
Body Weight	g	
Body Offset Fwrd	mm	
Front Post	1dot ☐ 2dot ☐ 3dot ☐ Pin Hole 123456 ☐	
Rear Post	1dot ☐ 2dot ☐ 3dot ☐ Pin Hole 123456 ☐	
Type:		

Notes:

CHASSIS

Chassis	
ST ■ CF ☐ AL ☐	
Top Deck Options	1 Pc TITC U9550 ■
Front 2 Piece	C/F 1.6 ☐ C/F 2.0 ☐
Rear 2 Piece	C/F 1.6 ☐ C/F 2.0 ☐
Motor Mount Screws	R ■ ■ ☐ ☐ F
PTFE Tape ☐	Total Weight 1315 g
Weight Distribution	50%50 g - Rear

ELECTRONICS

E.S.C.	HW G3	+ g
Servo	Aerox LP2S	
RX	Sanwa	+ g
LiPo	Aerox 6600	+ g
Motor	HW 4.5T	Spacers mm
Rotor Dia.	12.3 mm	
Timing	35 deg	
Gear Pitch	48 ■ 64 ☐	
Pinion	17 t	
Spur	69 t	
Ratio	7.37	

SHOCKS

KEY: **x** = Stroke, **e** = external

	FRONT	REAR
Spring	2.8	3.0
Oil	350 cSt	350 cSt
Piston	Kit ■	Kit ■
Length (x)	8 mm	8 mm
Rebound	0 mm	0 mm
Limiters (e)	0 mm	0 mm
Body	Kit ■ K-Coat U8770 ☐	

Notes:

SET UP SHEET

Schumacher

Driver:	Track:	Event:	
Date:	Qualifying:	Final:	Best Lap:

TRACK TYPE

Grip Level	High ☐ Medium ☐ Low ☐
Type	Tight ☐ Open ☐ Mixed ☐
Condition	Flat ☐ Bumpy ☐ Mixed ☐
Surface	Tarmac (Asphalt) ☐ Carpet ☐
Track Temp	°C
Weather	

Notes:

TYRES

Side Wall Glue Height Ø	mm		
Tyres			
Cleaner			
Additive		Wet on track ☐	
Additive Time	Front: mins	Rear: mins	
Heating Time	Front: mins	Rear: mins	
Heating Temp	Front: °C	Rear: °C	

Notes:

FRONT

KEY: **CF** = Carbon Fibre, **AL** = Aluminium, **P** = Plastic, **ST** = Steel
F = Front, **R** = Rear

Ride Height	mm
Camber	deg
Droop	mm
Castor	deg
Toe	deg
Anti Roll Bar	1.1 ☐ 1.2 ☐ 1.3 ☐ 1.4 ☐
Upper Link Mount	0 Notch ☐ 1 Notch ☐ 2 Notch ☐
Spool Height	↑☐ ↓☐ U8777 +0.5mm Alloy Eccentric ☐ U9523 Low Trans Housing ☐
Servo Horn Height	mm Saver ☐
Steering Travel	in out
Shock Mount Position	Inboard ☐ Outboard ☐

Notes:

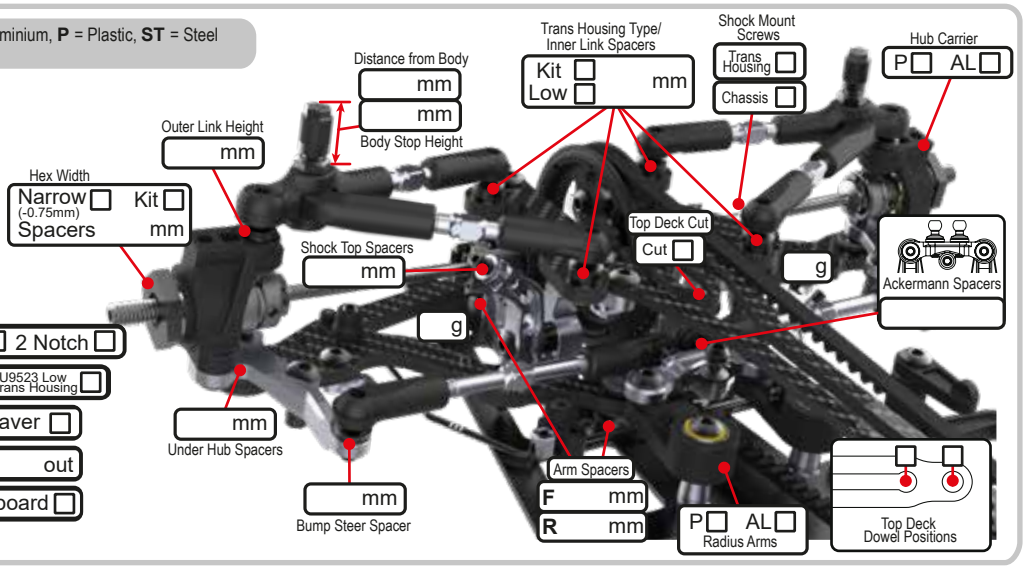

REAR

KEY: **CF** = Carbon Fibre, **AL** = Aluminium, **P** = Plastic, **ST** = Steel
F = Front, **R** = Rear

Ride Height	mm
Camber	deg
Droop	mm
Castor	deg
Toe	deg
Anti Roll Bar	1.1 ☐ 1.2 ☐ 1.3 ☐ 1.4 ☐
Upper Link Mount	0 Notch ☐ 1 Notch ☐ 2 Notch ☐
Diff Height	↑☐ ↓☐ U8777 +0.5mm Alloy Eccentric ☐ U9522 Low Trans Housing ☐
Diff Setting	cSt Diff Checker # Warming ☐ Duration:

Notes:

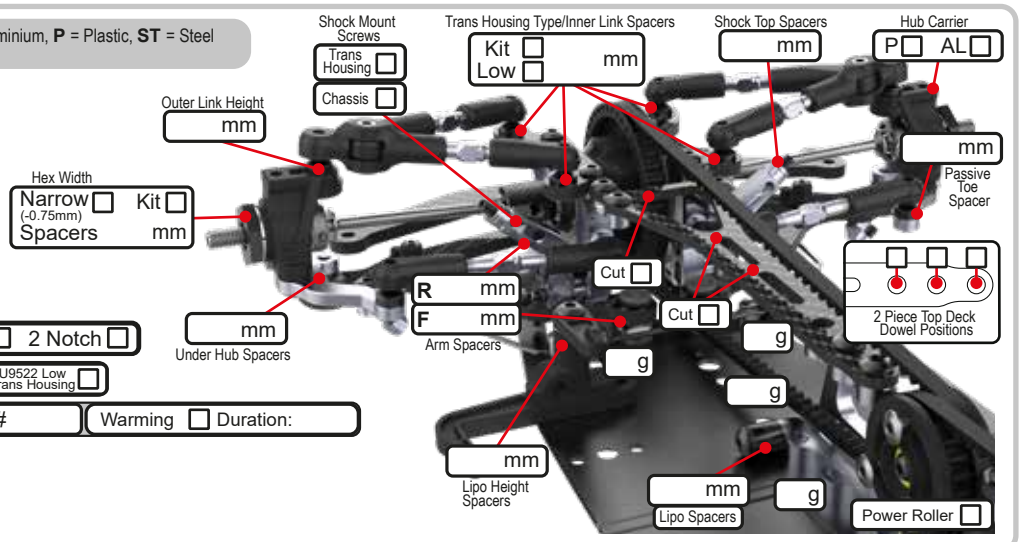

BODYSHELL

Body	
Wing	End Plates ☐
Wing Height	mm
Splitter Height	mm
Body Weight	g
Body Offset Fwrd	mm
Front Post	1dot ☐ 2dot ☐ 3dot ☐ Pin Hole ☐ 123456
Rear Post	1dot ☐ 2dot ☐ 3dot ☐ Pin Hole ☐ 123456
Type:	

Notes:

CHASSIS

Chassis	
ST ☐ CF ☐ AL ☐	
Top Deck Options	
1 Pc TITC U9550 ☐	
Front 2 Piece	Rear 2 Piece
C/F 1.6 ☐	C/F 1.6 ☐
C/F 2.0 ☐	C/F 2.0 ☐
Motor Mount Screws	R ☐ ☐ ☐ ☐ F
PTFE Tape ☐	Total Weight g
Weight Distribution	
%	g - Rear

ELECTRONICS

E.S.C.	+ g
Servo	
RX	+ g
LiPo	+ g
Motor	Spacers mm
Rotor Dia.	mm
Timing	deg
Gear Pitch	48 ☐ 64 ☐
Pinion	t
Spur	t
Ratio	

SHOCKS

KEY: **x** = Stroke, **e** = external

	FRONT	REAR
Spring		
Oil	cSt	cSt
Piston	Kit ☐	Kit ☐
Length (x)	mm	mm
Rebound	mm	mm
Limiters (e)	mm	mm
Body	Kit ☐ K-Coat U8770 ☐	

Notes: