SET UP SHEET

Schumacher

iCON2

Driver: Andreas Stiebler	**Track:** AMCA-Apeldoorn	**Event:** ETS Round 1	
Date: 04.06.2023	**Qualifying:** 3	**Final:** 1	**Best Lap:** 16.492

TRACK TYPE

Grip Level	High ☒ Medium ☐ Low ☐
Type	Tight ☐ Open ☒ Mixed ☐
Condition	Flat ☐ Bumpy ☐ Mixed ☒
Surface	Tarmac (Asphalt) ☒ Carpet ☐
Track Temp	°C
Weather	Sunny

Notes:

TYRES

Tyres	Contact Rear-30SH / Front-45SH	
Cleaner	front & rear with painters tape	
Additive	MR33 V4	
Additive Time	Front: 20 mins	Rear: 40 mins
Heating Time	Front: 15 mins	Rear: 15 mins
Heating Temp	Front: 55 °C	Rear: 55 °C

Notes:

Tire Diamantion:
Front: 59mm
Rear: 61mm

FRONT

KEY: **CF** = Carbon Fibre, **AL** = Aluminium, **P** = Plastic, **F** = Front, **R** = Rear
H = High, **L** = Low, **Y** = Yes, **N** = No, **V** = Vertical, **H** = Horizontal

Ride Height	4,4 mm		
Droop	5,4 mm		
Toe Out	1,0 deg	St Links	21,3 mm
Servo Horn Height	16 mm	Saver	☐
Steering Travel	23° in	13° out	
Castor	~8 deg		

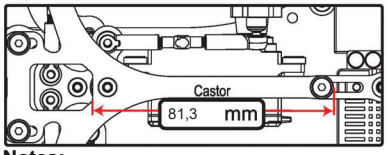

Notes:

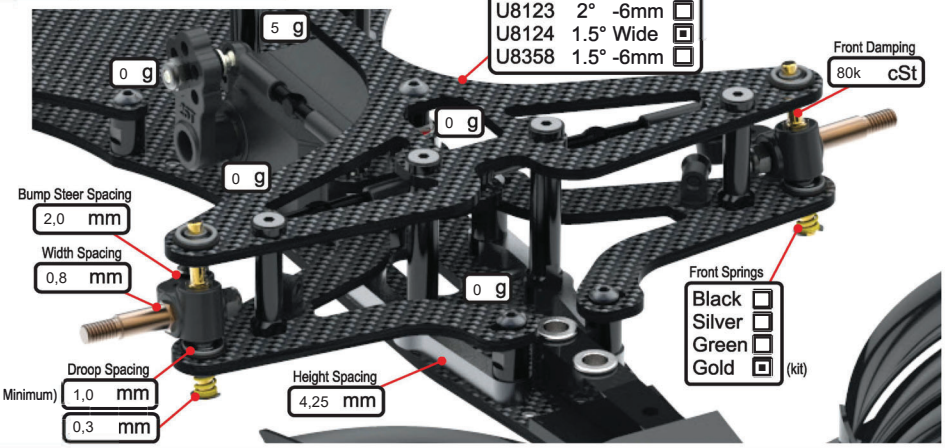

REAR

KEY: **CF** = Carbon Fibre, **AL** = Aluminium, **P** = Plastic, **F** = Front, **R** = Rear
H = High, **L** = Low, **Y** = Yes, **N** = No, **V** = Vertical, **H** = Horizontal

Ride Height	4,6 mm		
Droop	6,5 mm		
Track width	190 mm		
Diff Type	Gear ☒	Ball ☐	Spool ☐
Diff Oil (Gear Diffs)	4k cSt		

Eccentric Height

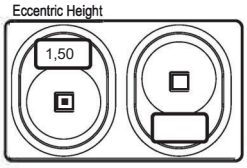

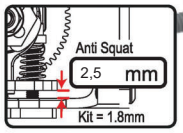

Notes:

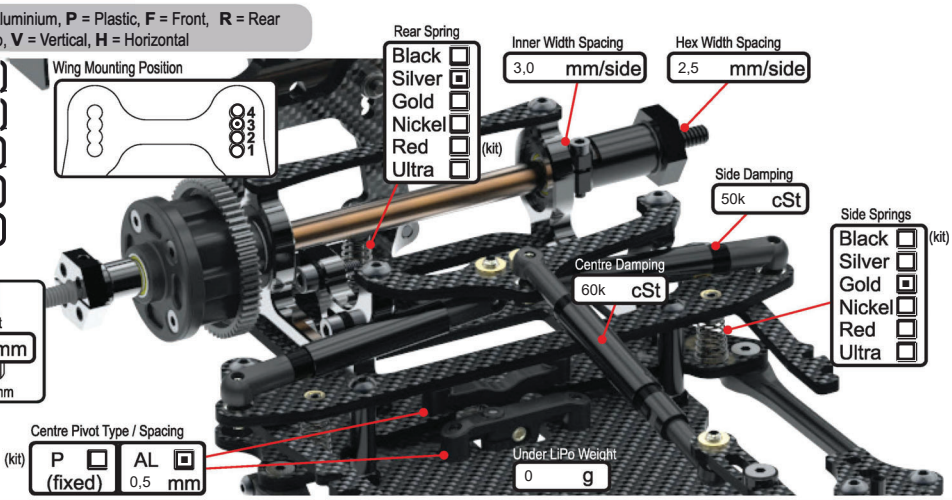

BODYSHELL

Body	Gonzo
Rear Wing	Montech 2022
Rear Wing Height	111 mm
Front Wing	Montech 2022
Front Wing Flaps	none
Front Post Hole #	
Front Post Hanger #	
Rear Post Hole #	5
Rear Post Hanger #	3
Wing Offset Rwrd	0 mm
Body Weight	40 g

CHASSIS

Chassis	AL ☐	CF ☒
Wheelbase	Short ☐	Long ☒
Total Weight	1053 g	
Weight Distribution	F 42% : 58% R	
Mass Dampers		
F ☒	23g	500 cSt
R ☐		cSt

Notes:

Mass Dampers:
Red springs

ELECTRONICS

E.S.C.	Hobbywing ETS	
Servo	Highest BLP650	
RX	Sanwa RX-492	
LiPo	Sunpadow Platin 6500mAh HV	
Motor	Hobbywing ETS	
Rotor Dia.	mm	
Timing	deg	
Gear Pitch	48 ☐	64 ☒
Pinion	47 t	
Spur	88 t	
Ratio	1.87	

Notes:

Front Track width 190mm

Rear spring: Silver + Ride yellow big bore [RI-28055]

30mm Fan in the back [CR264]

Bump Steer Spacing:
Add 2mm shim to the 4mm shim above ALLOY STEERING HOUSING [U8114]