FT9 SETUP SHEET

Driver: Andy Murray	**Track:** Stafford-Dry	**Event:** BRCA R4 Stafford DRY CAR	
Date: 3/8/25	**Qualifying:** 1	**Final:** 1	**Best Lap:** 17.1

TRACK TYPE

Grip Level	High ☐ Medium ☑ Low ☑
Type	Tight ☐ Open ☐ Mixed ☑
Condition	Flat ☑ Bumpy ☑
Surface	Asphalt ☑ Carpet ☐
Track Temp	°C
Weather	Half rain runs, cold and wet

TYRES

Side Wall Glue Height Ø				mm
Tyres	BRCA 25 Slicks worn after many runs before.			
Cleaner	Wurth			
Additive	mr33 v3 brca hand out			
Additive Time	Front:	25 mins	Rear:	25 mins
Heating Time	Front:	24 mins	Rear:	24 mins
Heating Temp	Front:	62 °C	Rear:	62 °C

-Fixed stiff upper wishbones front mi7
-Topdeck brace on front and front shock tower to make front very stiff.
- Inner active toe link spacer 0.5mm
-front hole cut off topdeck for wheelbase
-All topdeck screws used

Schumacher

FRONT

KEY: **CF** = Carbon Fibre, **AL** = Aluminium, **P** = Plastic, **F** = Front, **R** = Rear
H = High, **L** = Low, **Y** = Yes, **N** = No, **V** = Vertical, **H** = Horizontal

Ride Height	5.0 mm
Camber	1.8 deg
Droop	22.6 mm
Castor	3.6 (fixed arm) deg
Toe	1out/side deg
Anti Roll Bar	1.1 ☐ 1.2 ☑ 1.3 ☐ 1.4 ☐
Upper Link Mount	0 Notch ☐ 1 Notch ☑
Diff Height	↑☐ ↓☑ U8777 +0.5mm Alloy Eccentric ☐ U8729 High Trans Housing ☑
Diff Oil	200k cSt
Servo Horn Height	15.5 mm Saver ☐
Steering Travel	28 in 20 out

high bulkheads

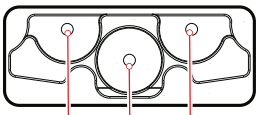

Hex Width: Narrow ☐ (-0.75mm) Kit ☑
Spacers mm

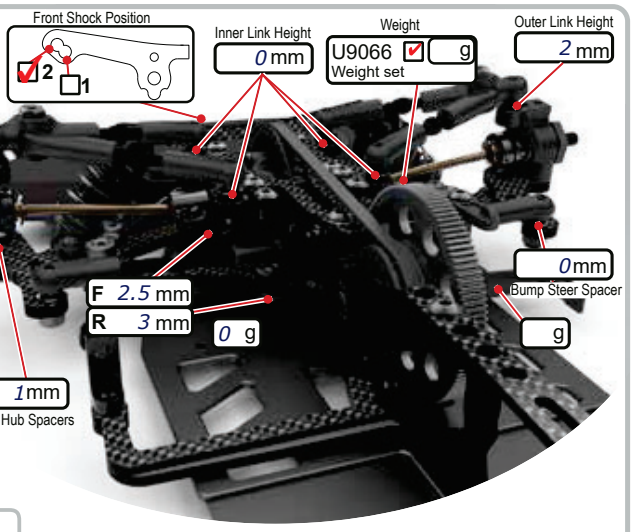

ST Arm Position: 2 ☑ (kit) 1 ☐

REAR

KEY: **CF** = Carbon Fibre, **AL** = Aluminium, **P** = Plastic, **Ti** = Titanium, **F** = Front, **R** = Rear
H = High, **L** = Low, **Y** = Yes, **N** = No, **V** = Vertical, **H** = Horizontal

Ride Height	5.4 mm
Camber	1.7 deg
Droop	21.6 mm
Castor	2.0 deg
Toe	2.5in deg
Anti Roll Bar	1.1 ☐ 1.2 ☐ 1.3 ☑ 1.4 ☐
Wheelbase	Short ☑ Medium ☐ Long ☐

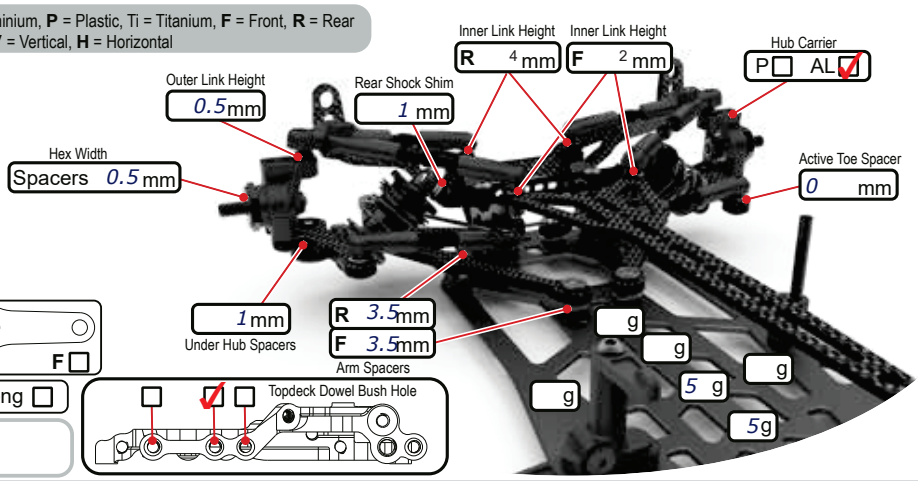

BODYSHELL

Body	YRS regular
Wing	std
Wing Height	121 mm
Splitter Height	7.4 mm
Body Weight	g
Body Offset Fwrd	58.5 mm
Wing Offset Rwrd	0 mm
Wing End Plates	☐
Front Post	1dot ☑ 2dot ☐ 3dot ☐ Pin Hole 9
Rear Body Mount Height	High ☑ Med ☐ Low ☐

CHASSIS

Chassis	AL ☐ CF ☑
PTFE Tape	☐
Motor Mount Screws	R ☑ ☐ ☐ F ☐
Total Weight	1290 g
Weight Distribution Forwards	%

need to make lighter

ELECTRONICS

E.S.C.	justock + g
Servo	aerox lp1s
RX	482 + g
Battery	aerox 5600 + g
Motor	justock motor fan 30mm Spacers mm
Rotor Dia.	mm
Timing	deg
Gear Pitch	48 ☑ 64 ☐
Pinion	58 t
Spur	88 t
Ratio	

SHOCKS

KEY: **x** = Stroke, **e** = external
V = Vented (Drilled), **S** = Sealed

	FRONT	REAR
Cap Type	V ☑ S ☐	V ☑ S ☐
Body	Kit ☑ Kashima Coated ☐	
Oil	200 cSt	250 cSt
Piston	kit	kit
Spring	white	green
Length (x)	8 mm	8 mm
Rebound	1 mm	1 mm
Limiters (e)	0 mm	0 mm

racing-cars.com