SP1-F RCMAKER SETUP SHEET

DRIVER	Mike Martinez	CLASS	fronty	COMPOSITION		TRACK TEMP	
TRACK	monteux	RESULT	Q 4 F 2	LAYOUT		AIR TEMP	
EVENT	cf round 1	BEST LAP	20.9	SURFACE		COMMENTS	
DATE	29/03/25	BEST RUN		LAPS		TRACTION	

TRANSMISSION

FRONT DIFF OIL 100 cst

SPUR 82 PINION 43 FDR

SHOCKS

FRONT		REAR
2.2	SPRING	2.6
300 cst ☐ wt ☐	OIL	350 cst ☐ wt ☐
☐ MACHINED 1.1	PISTON	1.1 ☐ MACHINED
☑ HOLE IN CAP 0 mm	REBOUND	0 mm ☑ HOLE IN CAP
☐ PROGRESSIVE ☑ LINEAR	BODY	☑ LINEAR ☐ PROGRESSIVE
7.5 mm	LENGTH	8.5 mm

TIRES

FRONT TIRES	rush 36x	
REAR TIRES	rush 36x	
ADDITIVE	mr33 V3	
ADDITIVE TIME	Fr 15 min/Rr	/ min
WARMER TIME	Fr min/Rr	min
WARMER TEMP	Fr deg/Rr 80	deg

BODY

TYPE	yrs
WEIGHT	0.7
WING	std
POSITION (WINDSCREEN TO FRONT POST HOLE)	56 mm
HEIGHT (GROUND TO TOP OF REAR WING)	mm

ELECTRONICS

SERVO	power hd s15
ESC	Orca wle
MOTOR	Orca biltreme 3
BATTERY	

NOTES

4030 on front rockers
front upper arms upside
front top deck cut
10g on rear

FRONT

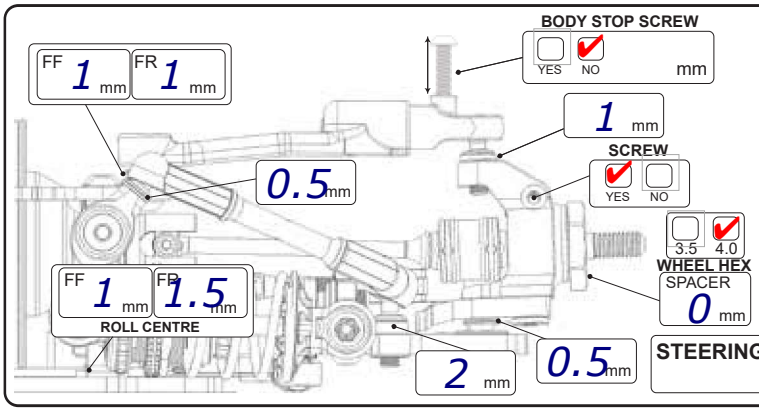

CAMBER	2	deg
TOE OUT	1	deg
RIDE HEIGHT		mm
DROOP (ARM ☐ AXLE ☑)	23.8	mm
DIFF HEIGHT	HIGH ☑ LOW ☐	
ANTI-ROLL BAR	1.1	mm
STEERING ANGLE	IN	OUT

REAR

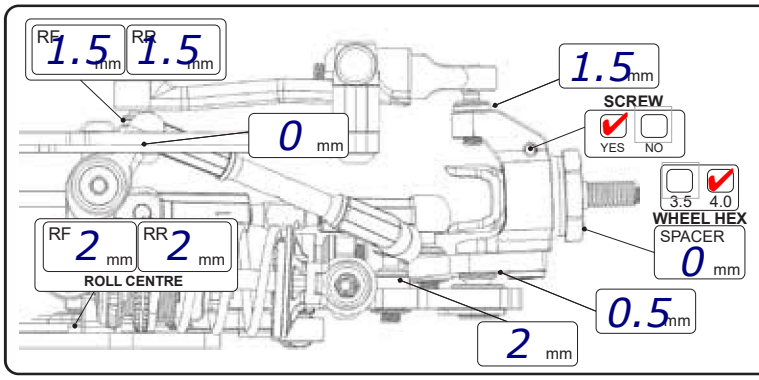

CAMBER	2	deg
TOE IN	2.75	deg
RIDE HEIGHT	5.6	mm
DROOP (ARM ☐ AXLE ☑)	22.6	mm
DIFF HEIGHT	HIGH ☐ LOW ☐	
ANTI-ROLL BAR	1.2	mm
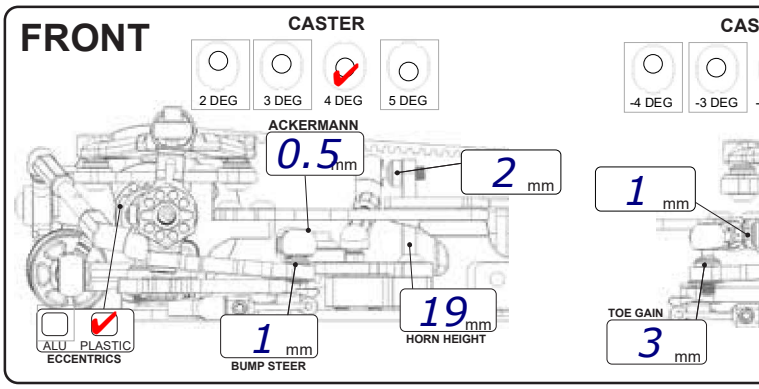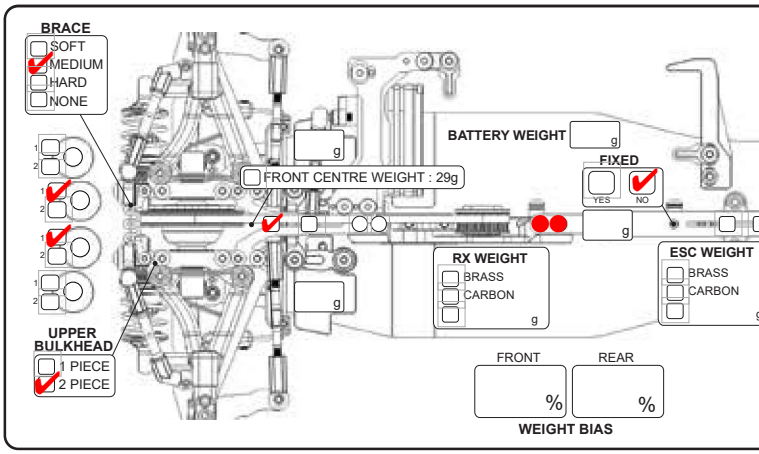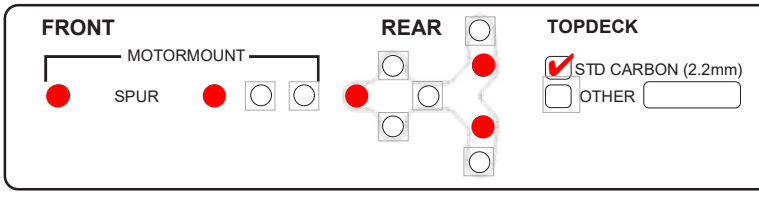
FRONT / REAR