SP1 RCMAKER SETUP SHEET

DRIVER	Rhys Marshall	CLASS	13.5 blinky	COMPOSITION	Asphalt	TRACK TEMP	
TRACK	Moorebank NSW	RESULT	Q 9 F 7	LAYOUT	fast with hairpins	AIR TEMP	13c - 20c
EVENT	NSW state titles	BEST LAP	17.8	SURFACE	untreated asphalt	COMMENTS	rain early in event, traction mildly increased each day.
DATE	30/4/25 - 3/5/25	BEST RUN / LAPS		TRACTION	medium		

TRANSMISSION

FRONT		REAR
SPOOL ✔	DIFF OIL	5000 cst
DIFF ☐		
OIL	cst	

SPUR PINION FDR

SHOCKS

FRONT		REAR
2.2-2.5	SPRING 2.8	
300 cst ✔ wt ☐	OIL 350	cst ✔ wt ☐
☐ MACHINED kit	PISTON kit	☐ MACHINED
✔ HOLE IN CAP 0 mm	REBOUND 0 mm	HOLE IN CAP ✔
☐ PROGRESSIVE ✔ LINEAR	BODY ✔ LINEAR	☐ PROGRESSIVE
7.6 mm	LENGTH 8.5 mm	

TIRES

TIRES	Sweep d36		
ADDITIVE	mighty gripper yellow		
ADDITIVE TIME	Fr	15 min/Rr	15 min
WARMER TIME	Fr	15 min/Rr	15 min
WARMER TEMP	Fr	70 deg/Rr	70 deg

BODY

TYPE	Speciale
WEIGHT	.5
WING	wolverine
POSITION (WINDSCREEN TO FRONT POST HOLE)	61 mm
HEIGHT (GROUND TO TOP OF REAR WING)	mm

ELECTRONICS

SERVO	MKS HBL557SL
ESC	Hobbywing G3X
MOTOR	Hobbywing G4R
BATTERY	EAM 7000

NOTES

-2 front end
4030 ball studs on front rocker
1040 stiff rear top deck
4118 and 4119 polished balls installed

FRONT

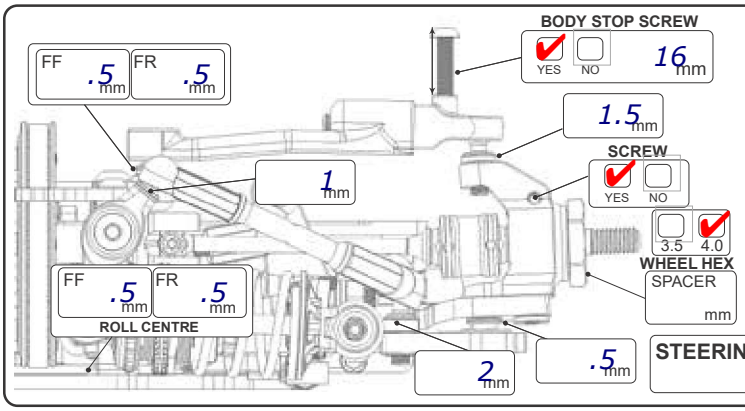

CAMBER	2 deg
TOE OUT	1 deg
RIDE HEIGHT	4.8 mm
DROOP (ARM ☐ AXLE ✔)	23.6 mm
DIFF HEIGHT (HIGH ☐ LOW ✔)	
ANTI-ROLL BAR	1 mm
STEERING ANGLE	IN 26 OUT

REAR

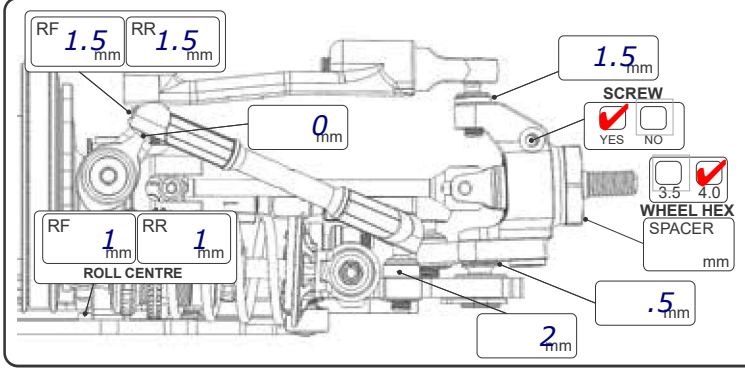

CAMBER	2 deg
TOE IN	3 deg
RIDE HEIGHT	5.6 mm
DROOP (ARM ☐ AXLE ✔)	23.0 mm
DIFF HEIGHT (HIGH ☐ LOW ✔)	
ANTI-ROLL BAR	1.1 mm
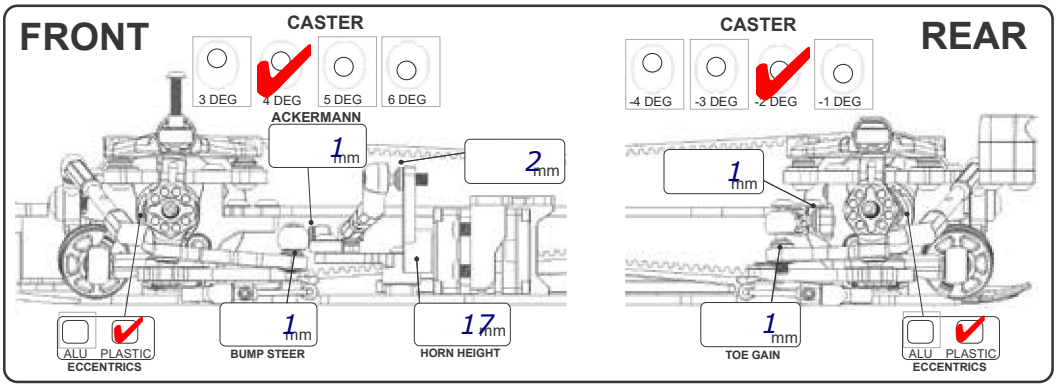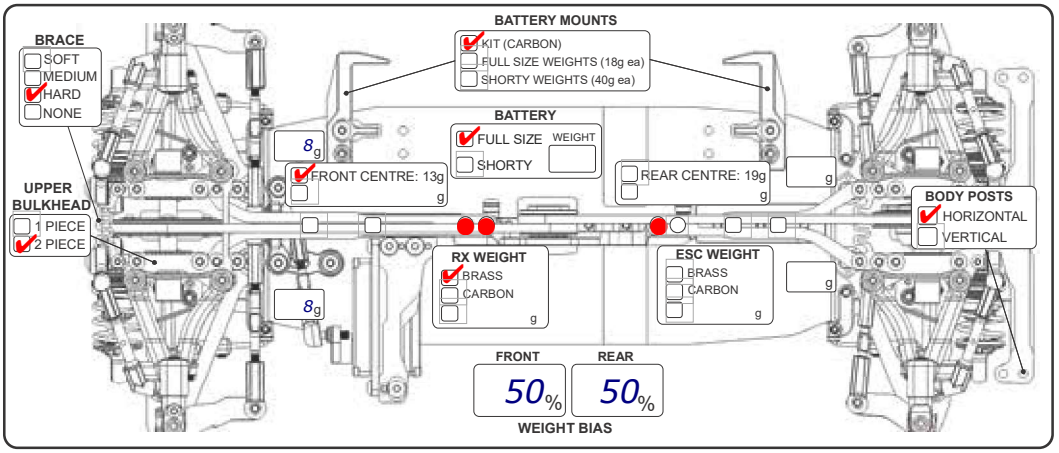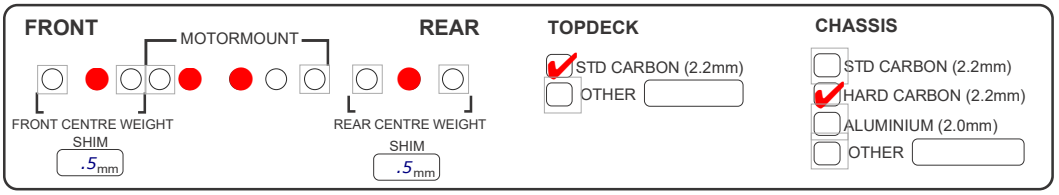
FRONT / REAR