SETUP SHEET

MTS -T2

NAME	Andrew Bird
DATE	02/02/2017
EVENT	TRRAC
TRACK	Tamworth Indoor

TRACK CONDITION: ☐ Asphalt (Indoor/Outdoor) ☑ Carpet ☑ Technical ☐ Mixed ☐ Fast ☐ Low ☑ Medium ☐ High ☐ Bumpy ☑ Smooth

HUMIDITY	TEMP AIR	TRACK
	21	

MOTOR: Actinium V2 17.5

PINION	SPUR	PITCH
35	72	48

ESC: Radeon V2 95A

BATTERY: Team Powers 5800 100C LCG

FRONT	SHOCKS	REAR
Green	SPRING	Purple
KIT	PISTON	KIT
600cst	OIL	500cst
	LENGTH	
0	PRELOAD	0
	REBOUND	
☐ Yes ☐ No	FOAM INSERTS	☐ Yes ☐ No
	O RING ON SHAFT	

KIT ANTIROLL BAR KIT

TIRE: Sorex 28JB

RIM:

INSERT: JB Foam

ADDITIVE: Jack The Gripper

SURFACE: Carpet

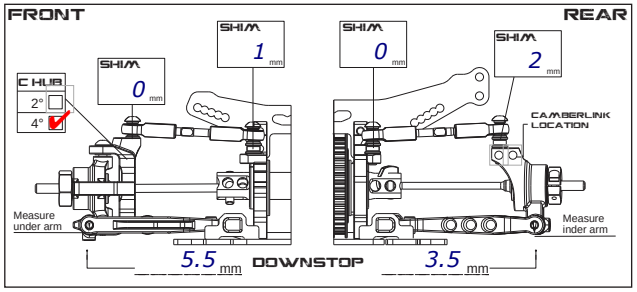

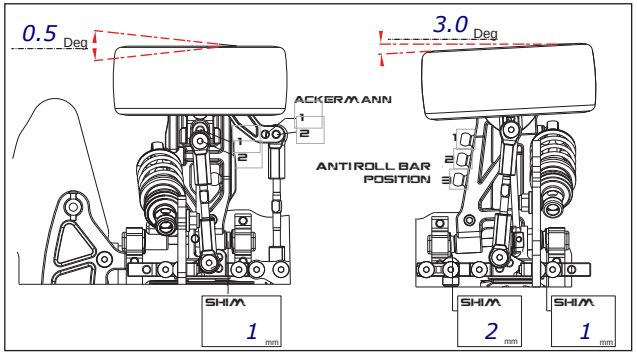

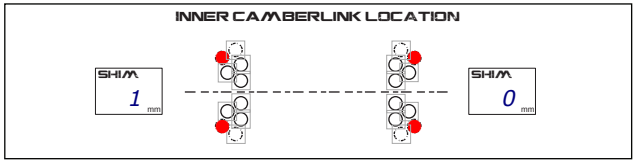

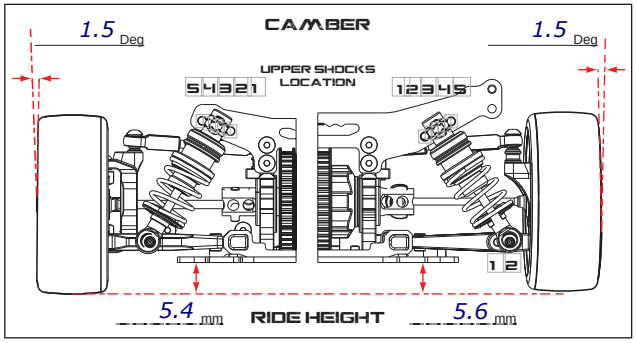

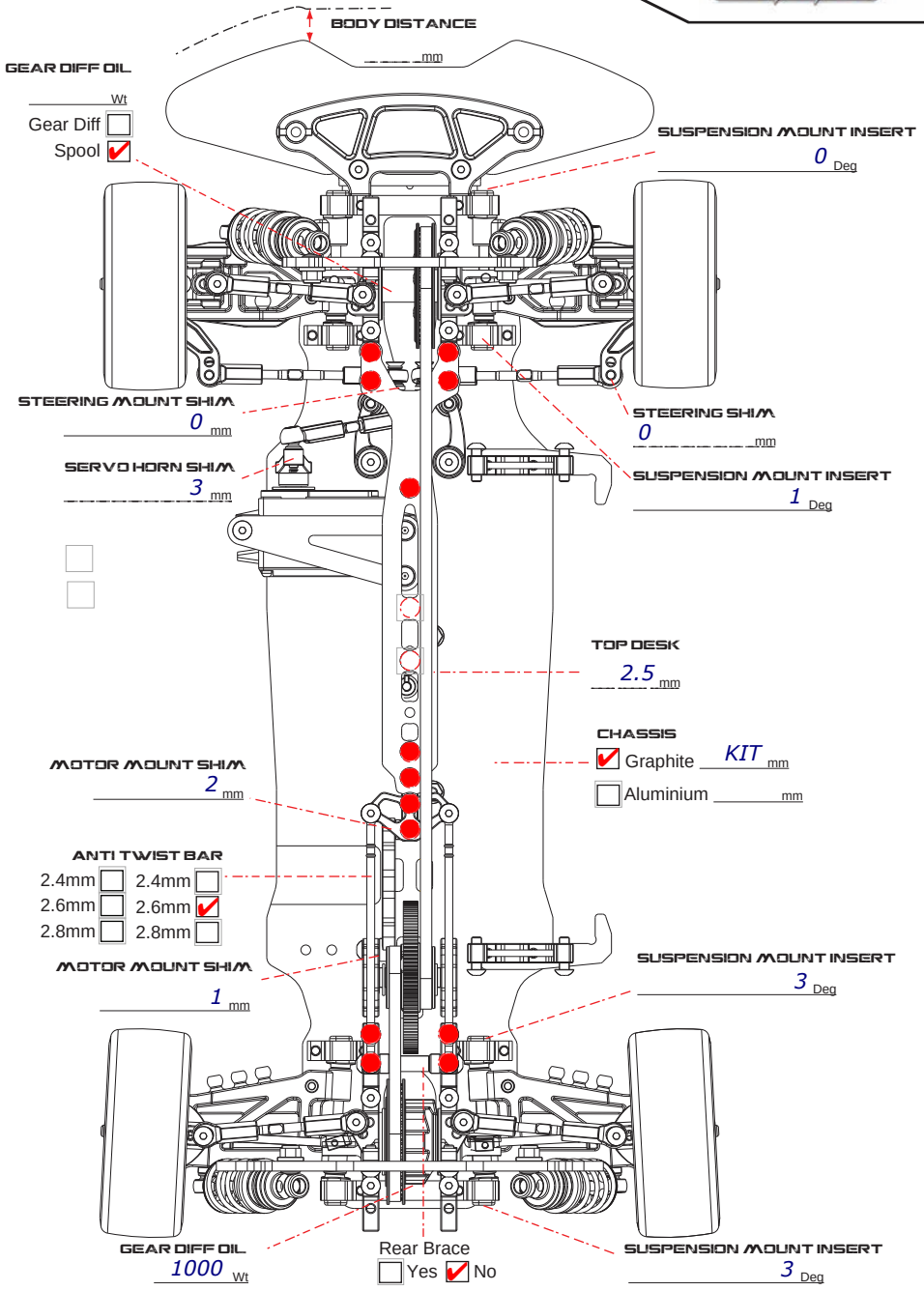

*** All Lower Roll Centres on Chassis Raised 1mm Shim*
*** Front C Hub Tops Cut Level and Link Mounted to top of Steering Block with Ball Cup*
RAS V2 Shocks Fitted, New Progressive RaceOpt Springs
*Xray Servo Saver *4 Spring, Option Roll Centre Extenders Fitted.*
Titanium Screws, Battery Supports Raised 1mm, Front one Filed down to allow Sterring arm more movement. Optional Floating Servo Rack Fitted.

Car is Bang on and a Great General Setup for Indoors / OutDoors.

Arn0 / PetitRC.com

RACEOPT