DRIVER: Timo Siebert TRACK/EVENT: ETS Rnd.2 Andernach DATE: 12.8-15.8

TRACK CONDITION

ENVIRONMENT: INDOOR ☐ OUTDOOR ☑
COMPOSITION: CARPET ☐ ASPHALT ☑
TRACTION: LOW ☐ MEDIUM ☑ HIGH ☐
LAYOUT: SLOW ☐ MIXED ☐ FAST ☑
SURFACE: BUMPY ☐ SMOOTH ☑

NOTES

ELECTRONICS

MOTOR: Orca 17,5 TIMING:
PINION: 102 SPUR: 43
ESC: Orca
BATTERY:
SERVO:
RECEIVER:

SHOCK ABSORBERS

FRONT	REAR
PISTON: Kit	PISTON: Kit
OIL: 450	OIL: 450
SPRING: 7,0 P	SPRING: 6,5
REBOUND: 0	REBOUND: 0

NOTES

ANTI-ROLL BAR

FRONT: 1.0 ☐ 1.1 ☐ 1.2 ☑ ☐
REAR: 1.0 ☐ 1.1 ☐ 1.2 ☑ ☐

TIRES & WHEELS

TIRE: Matrix ETS
INSERT:
WHEEL:
TREATMENT: MR33 V3 10 min with warmers

NOTES

REAR DIFFERENTIAL

OIL: 6000 (Mugen) / 1,6g g

AERODYNAMICS

BODY: Wolverine
WING: Std
WING POSITION: mm
BODY POSITION
HORIZONTAL: +4mm mm
VERTICAL

FRONT BODY HEIGHT & POSITION	REAR BODY POSITION A2407C	REAR BODY POSITION A2416B
mm	mm	mm

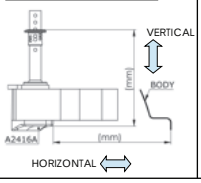

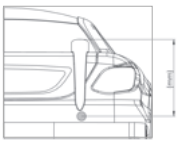

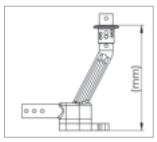

NOTES

STEERING LIMITER
☐ A2304 (5.0mm)
☑ A2305 (5.5mm)
☐ A2306 (6.0mm)

STEERING ANGLE
IN:
OUT: 18°

A2421 USED - SHIM (mm)
☑ YES 0
☐ NO

UPPER ARM POSITION (CASTER)
REAR/5° ☐ ☑ FRONT/4°

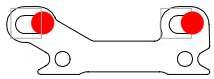

STEERING ROD POSITION
☑ REAR
☐ FRONT

A2421

UPPER ARM POSITION
FR (mm) 0,5
FF (mm) 0,5

SHOCK POSITION 3

SHIM UPRIGHT TOP (mm) 3,5

CAMBER (°) 2

TOE (°) 1

OFFSET (mm) 4

SHIM STEERING ROD (mm) 3

SHIM UPRIGHT BOTTOM (mm) 0

LOWER ARM POSITION
FR (mm) 1,5
FF (mm) 0,5

RIDE HEIGHT (mm) 4,6

DOWNSTOP (mm) 6

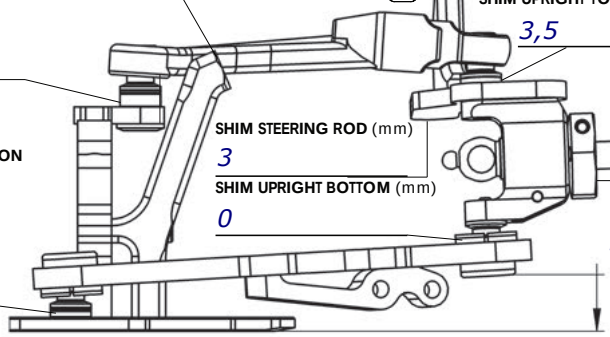

FRONT

A2529 POSITION

A2530 POSITION

ACKERMANN SHIM (mm) 2

HORN SHIM (mm) 4

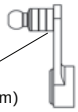

TYPE SERVO HORN Mugen

HORN LENGTH (mm) 17

UPPER ARM POSITION (CASTER)
FRONT/4° ☑ ☐ REAR/3°

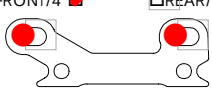

REAR TIE ROD POSITION
☐ FRONT
☑ REAR

UPPER ARM POSITION
RF (mm) 0,5
RR (mm) 0,5

SHOCK POSITION 3,5

SHIM UPRIGHT TOP (mm) 1,5

CAMBER (°) 2

TOE (°) 2

☐ A2219
☐ A2224

OFFSET (mm) 4,5

LOWER ARM POSITION
RF(mm) 2
RR (mm) 2

SHIM TIE ROD (mm) 3

SHIM UPRIGHT BOTTOM (mm) 0

RIDE HEIGHT (mm) 5,4

DOWNSTOP (mm) 4

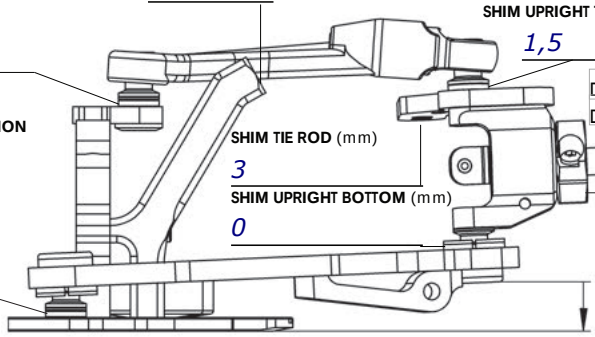

REAR

BATTERY ROD POSITION FRONT ☐ ☑ REAR

CHASSIS TYPE Carbon

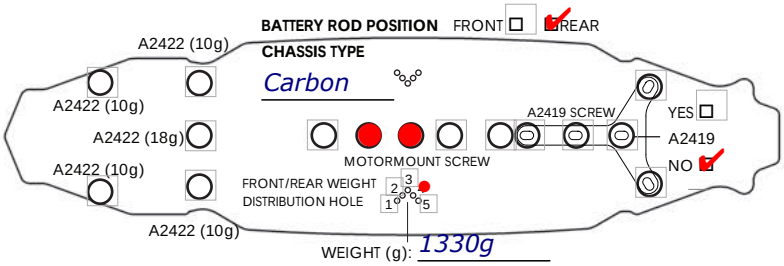

WEIGHT (g): 1330g

OPTIONAL WEIGHT

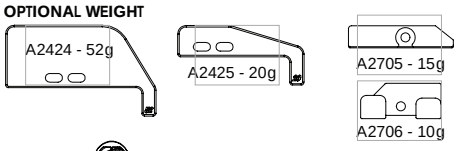

BELT TENSION
FRONT POSITION 2
REAR POSITION 2

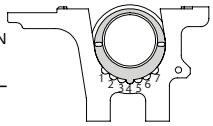

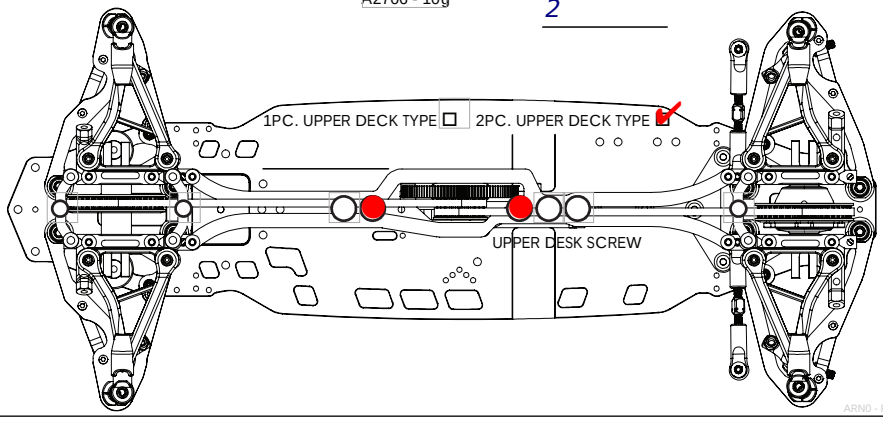

ARN0 - PETITRC

COMMENTS

20g under the receiver
36g under ESC
Motor 3mm shimmed out