SET-UP SHEET

Driver	Mark Burgess
Race	ETS Season 18 Round 2
Track	MAV Aigen-Schlagl
Date	24th to 27th July 2025

Track Conditions

Composition	✔ Asphalt		☐ Carpet
Environment	✔ Outdoor	☐ Indoor	
Layout	☐ Technical	☐ Mixed	✔ Fast
Traction	☐ Low	✔ Medium	☐ High
Surface	✔ Flat	☐ Bumpy	

Transmission

Gear diff oil/cst:	300k	**Spur**	90
Gear diff oil/grams:	1.0g	**Pinion**	38
Final drive ratio (1.9)	4.50		

Belt width

Front White 3mm

Front	Shocks	Rear
12.6	**Spring**	23.9
350 CST Core-RC	**Oil**	550 CST Core-RC
Progressive	**Piston**	Progressive

Internal shock spring

	3mm	5mm	7mm
soft			
med		✔	✔

HEAVE SHOCK

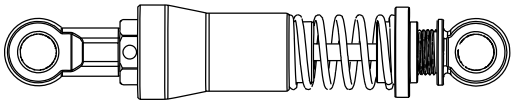

Spring _____ **Oil** _____ **Preload** _____

Front	Stabilizer Thickness	Rear
1.2mm		1.4mm
	Weight balance %	

Tyres	ETS Ride TR09 slicks
Additive	MR33 V3
Additive Time	30 minutes (2 applications, 60 C)

Treated Area

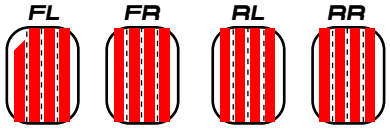

Motor	HW Justock17.5	**Timing**	N/A
ESC	HW Justock G3S	**Batteries**	ABM 4400
Body	MonTech Civic	**Wing**	Original wing

Ceramic bearings. +15mm servo mount. 4 deg front caster. Red top deck screws. Balance really good especially on new tyres: Seeded 21st, 19th in Round 2, Q27. 1526g

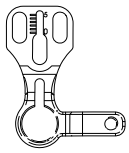

Ackermann setting 3 mm

Steering lock inside tire 21 degree

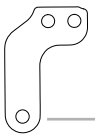

FRONT

Upper Arm medium ✔ hard ☐
Lower Arm medium ☐ hard ✔

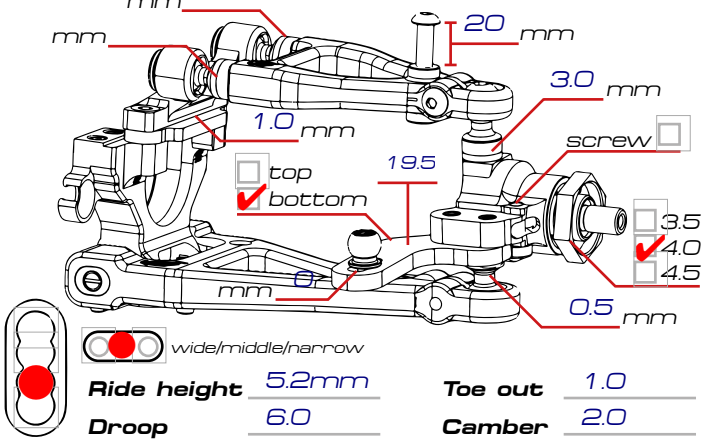

Ride height	5.2mm	**Toe out**	1.0
Droop	6.0	**Camber**	2.0

REAR

Upper Arm medium ✔ hard ☐
Lower Arm medium ☐ hard ✔

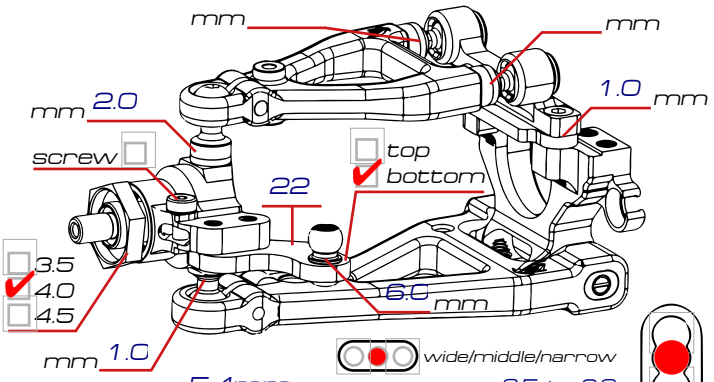

Ride height	5.4mm	**Toe in**	2.5 to 3.0
Droop	5.0	**Camber**	2.0

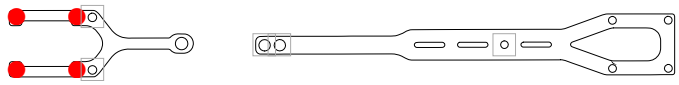

Topdeck ☐ Front & Rear
● One-Piece ☐ One-Piece Zero Hole

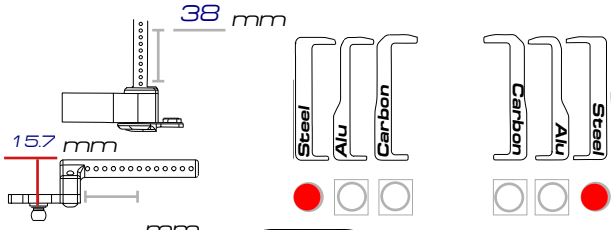

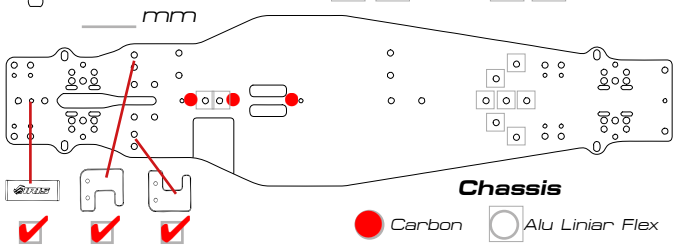

Chassis
● Carbon ☐ Alu Liniar Flex