SET-UP SHEET

Driver	Alexandre Kunkler
Race	Euros practice
Trackname	Türkheim
Date	2023-07-01/02

Track conditions

Surface	✓ Asphalt Outdoor	☐ Asphalt Indoor	☐ Carpet
Layout	☐ Tech	✓ Med	✓ Fast
traction	✓ Low	☐ Med	☐ High

Transmission

Gear diff oil/cst:	3000cst
Gear diff oil/grams:	1.0g
Spurgear	100
Pinion	46
Final drive ratio (1.9)	4,1

Belt width

Front	2,5
Middle	2,5
Rear	2,5

Front	Shocks	Rear
12.9	**Spring**	33.1
550cst	**Oil**	1000cst
1 hole	**Piston**	1 hole
std	**Housing**	std

HEAVE SHOCK

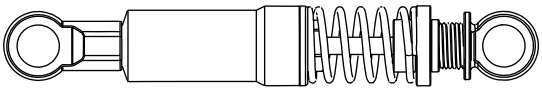

Spring _____ **Preload** _____

Oil _____ **Piston** _____

Front		Rear
1.1	**Stabilizer Thickness**	1.2
49	**Weight balance %**	51

Front		Rear
Hotrace	**Tires**	Hotrace
CS	**Additive**	CS
10 min	**Additive time**	10 min
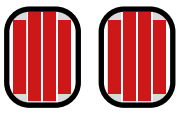	**Treated area**	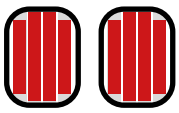

Motor	Ruddog Racing 13.5T	**Timing**	42°
ESC	Ruddog Racing RXS	**Batteries**	Ruddog Racing 9000
Body	Bitttydesign Eptron	**Wing**	Bittydesign Modspec

Titanium ballstuds
3mm rear topdeck
3.5mm rear wheelhex

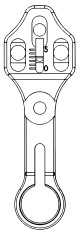

Ackermann setting

2,5 mm

Steering lock inside tire

23 degree

Servo arm length

17 mm

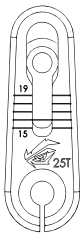

FRONT

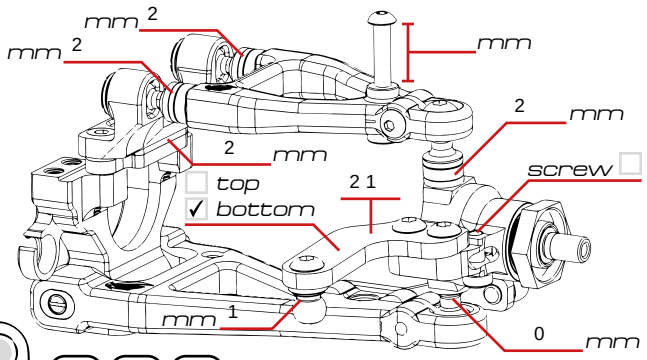

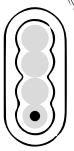

wide/middle/narrow

Ride height	5.2	**Toe out**	1
Droop	5	**Camber**	1.5

REAR

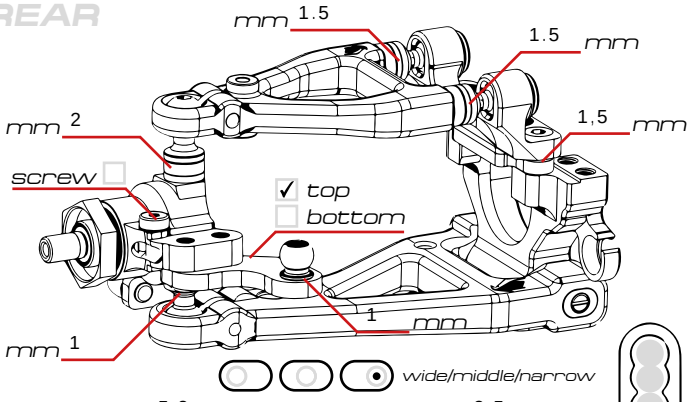

wide/middle/narrow

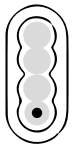

Ride height	5.8	**Toe in**	3,5
Droop	4,8	**Camber**	1.5

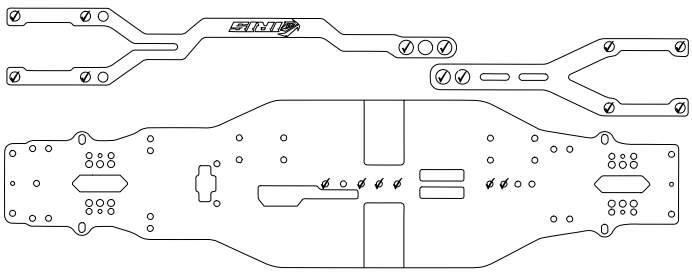

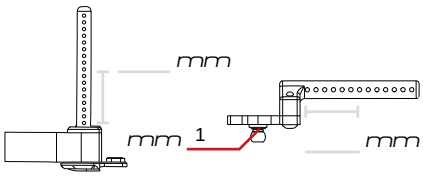

Chassis

- ● Carbon
- ○ Alu Liniar Flex
- ○ Alu Solid